STATE OF CALIFORNIA
DEPARTMENT OF TRANSPORTATION

Plans Preparation Manual

Caltrans

Caltrans Metric

FOREWORD

This manual is not intended for use as a textbook or a substitute for engineering knowledge, experience, or judgment. It establishes uniform standards and procedures to use when preparing right of way maps, informational exhibits, application exhibits, and the development of project plans. The uses for and contents of the various drawings are described and, in most cases, illustrated by examples. This manual also seeks to acquaint the user with the use of the Metric System in engineering drawing preparation.

PLANS PREPARATION MANUAL

ISSUED BY

STATE OF CALIFORNIA
BUSINESS, TRANSPORTATION AND HOUSING AGENCY
DEPARTMENT OF TRANSPORTATION
DIVISION OF ENGINEERING SERVICES
OFFICE OF OFFICE ENGINEER

Current price for additional copies of this
manual may be obtained by writing

STATE OF CALIFORNIA
DEPARTMENT OF TRANSPORTATION
GENERAL PUBLICATION DISTRIBUTION UNIT
1900 ROYAL OAKS DRIVE
SACRAMENTO, CALIFORNIA 95815-3800
Telephone (916) 445-3520

FAX (916) 324-8997

Website Address: http://caltrans-opac.ca.gov/publicat.htm

Information concerning the contents
of this manual may be obtained by writing

STATE OF CALIFORNIA
DEPARTMENT OF TRANSPORTATION
DIVISION OF ENGINEERING SERVICES
OFFICE OF OFFICE ENGINEER
1727 - 30th STREET
SACRAMENTO, CALIFORNIA 95816
Website Address: http://www.dot.ca.gov/hq/esc/oe

Editor: John L. Gizinos, DES-OE, June 2001

TABLE OF CONTENTS

SECTION 1 ENGINEERING CADD DRAWING BASICS

SECTION 2 PROJECT PLANS

SECTION 3 PRELIMINARY PROJECT DEVELOPMENT DRAWINGS

SECTION 4 RIGHT OF WAY ENGINEERING MAPPING

SECTION 5 ERGONOMICS

The format of this manual has been revised such that the contents are suitable for insertion in a binder. The text portion of the manual is mostly in a 216 mm x 279 mm (8 1/2" x 11") size, while most plan sheet samples are in a 279 mm x 432 mm (11" x 17") foldout size.

ATTENTION IS DIRECTED TO SECTION 2-1.3 OF THIS MANUAL REGARDING USE OF THE METRIC SYSTEM IN THE PREPARATION OF PLANS.

TABLE OF CONTENTS

SECTION **PAGE NO.**

1-1. GENERAL 1-1
1-1.1 Purpose 1-1
1-1.2 Types of Engineering CADD Drawings 1-1

1-2. CADD DRAWING STANDARDS 1-1
1-2.1 Line Work 1-1
1-2.2 Lettering Standards 1-1
1-2.3 Shading and Coloring 1-1

1-3. PLANNING THE CADD DRAWING 1-1
1-3.1 General 1-1
1-3.2 Scales 1-2
1-3.3 Arranging the CADD Drawing 1-2
1-3.4 CADD Drawing Order 1-2
1-3.5 CADD Drawing Data 1-2

Return to Main Table of Contents

Engineering CADD Drawing Basics

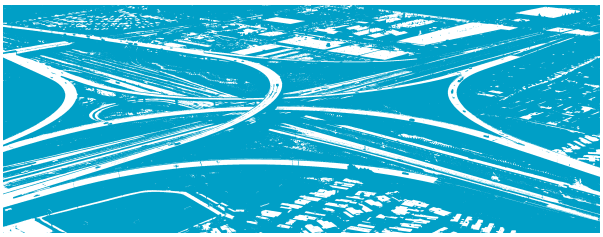

1-1 GENERAL

1-1.1 Purpose

The purpose of this Section is to acquaint the user with the procedures and standards used for the preparation of CADD engineering drawings.

1-1.2 Types of Engineering CADD Drawings

Engineering drawings are generally categorized into two types - geographical oriented and nongeographical oriented. Geographical oriented drawings have graphical elements (lines, symbols) located on the drawing by their on-ground horizontal (N,E) locations. For example, a layout sheet is geographically oriented. Nongeographical oriented drawings generally have graphical elements which describe the spatial relationship of an object or planned construction without a direct relationship to specific on-ground locations. An example is a detail drawing for a drainage inlet.

For a description of the information that determines what is a map, a working drawing and a plan, see Section 3-1.2 through 3-1.5 of this manual.

1-2 CADD DRAWING STANDARDS

The standards given in this manual are primarily intended to improve CADD drawing quality and readability.

1-2.1 Line Work

Line quality is extremely important to the readability of CADD drawings. Line widths are varied to distinguish certain classes of features from others. The more basic outlining features are emphasized with heavier (wider) lines. Examples are center lines, base lines, construction layout lines, and the basic outline of objects. Medium weight lines are used for proposed construction and right of way. Light lines are used for existing topography, dimensioning, and other less important details. Dashed or dotted lines are used to distinguish existing from proposed work. Refer to the CADD User's Manual and the EZ Guide.

1-2.2 Lettering Standards

(1) Size

Refer to Section 2.6 of the CADD User's Manual and the EZ Guide for lettering sizes and fonts.

(2) Reading Direction

(a) Horizontal Line: Read left to right.

(b) Vertical Lines: Read bottom to top.

(c) Diagonals: Read left to right.

1-2.3 Shading and Coloring

Shading and coloring of engineering drawings is not recommended and is not acceptable on project plans.

1-3 PLANNING THE CADD DRAWING

1-3.1 General

To be effective, an engineering CADD drawing must be clear, concise, complete, accurate, easily understood, and functional. It is a graphic set of instructions.

Return to Section 1 Table of Contents, page 2-1, page 2-71, page 2-231

1-3.2 Scales

Recommended scale for project plans and other drawings is discussed in Section 2 (Table 2-1.3A) of this manual. Caltrans base scale is 1:500. Most plan sheets will use the 1:500 scale border sheets. To show greater detail use 1:200 scale. If less detail is needed use 1:000 scale. To measure the actual length of an element in a given plotted scale, it must be plotted at the standard sheet size, 559 mm x 864 mm (22” x 34”) trim line dimensions.

If objects of different sizes are to be shown on the same engineering CADD drawing sheet, the detail for each object may be drawn to a different scale to provide a balanced appearance.

If an object is cross-sectionally uniform and the full length of the object can not be shown at the scale being used, the lines representing the length of the object may be broken and the dimensions indicated on the drawing.

1-3.3 Arranging the CADD Drawing

When preparing the engineering CADD drawings, it is important that the physical features be drawn in exact position. Labels, dimensions, notes, and other data should be positioned to present the most understandable picture. For example, the area within the right of way may be required for data pertinent to construction. Notes and other data should be placed outside the right of way.

1-3.4 CADD Drawing Order

Generally, there is no prescribed order to prepare a CADD drawing. Each type of drawing involves different preparation procedures.

For minimum interference, work should generally follow this procedure:

(1) Basic Control Lines

- Center lines
- Radial lines
- Station tick marks and figures
- Other construction lines
- Right of way lines

(2) Existing Topography (line work only)

- Roads and streets
- Driveways, walks and curbs
- Streams, ditches and drains
- Bridges and culverts
- Utilities (railroads, poles, and pipelines)
- Land lines
- Fences and gates
- Buildings
- Trees and shrubs.

Topographic symbols are shown on Standard Plan A10B. Existing topography may be provided by aerial photography, scanned maps, digitized maps or maps from ground surveys.

(3) Planned Construction Features (line work only)

- Roadways
- Drainage
- Substructures
- Miscellaneous items.

Construction and cadastral symbols are shown on Standard Plan A10B.

(4) Lettering, Labels, Data, and Notes

- Beginning of curves (BC’s) and end of curve (EC’s)
- Curve data
- Equations
- Tangent bearings and lengths
- Land lines
- General topography
- Street and road names
- Construction line designation
- North arrow
- Construction notes
- Sheet references and title.

1-3.5 CADD Drawing Data

CADD permits the separation of drawing data by kind of data. The CADD system defines the various layers of similar data, or overlays as “levels”. Geographical drawings are created by combining levels of data from a master drawing. Refer to Section 2.4 of the CADD User’s Manual.

Return to Section 1 Table of Contents

TABLE OF CONTENTS

SECTION **PAGE NO.**

2-1. GENERAL 2-1
2-1.1 Purpose 2-1
2-1.2 General Standards 2-1
2-1.2(A) Project Plan Sheet Formats 2-1
2-1.2(B) Electronic Plan Signatures and Project Development Names 2-6
2-1.2(C) Project Identification Blocks and County Abbreviations 2-12
2-1.2(D) Sheet Identification Codes, Sheet Names, and Plan Order 2-16
2-1.3 Use of the Metric System 2-19
2-1.4 Project Plan Submittals 2-24
2-1.5 Project Plan File Formats 2-27
2-1.6 Use of Standard Plans 2-27

2-2. PROJECT PLAN SHEET - SPECIFIC DATA AND EXAMPLES 2-29
2-2.1 Title Sheets 2-29
2-2.1(A) Title Sheet Header 2-31
2-2.1(B) Project Descriptions 2-31
2-2.1(C) Project Limits of Construction and Work 2-36
2-2.1(D) Listing of Title Sheet Examples 2-37
2-2.2 Typical Cross Sections 2-59
2-2.3 Key Map and Line Index 2-67
2-2.4 Layouts, Profiles, and Superelevation Diagrams 2-71
2-2.5 Construction Details 2-91
2-2.6 Temporary Water Pollution Control Plans and Details 2-95
2-2.7 Contour Grading Plans 2-97
2-2.8 Drainage Plans 2-101
2-2.9 Drainage Profiles 2-105
2-2.10 Drainage Details 2-109
2-2.11 Drainage Quantities 2-113
2-2.12 Sanitary Sewer Plans, Profiles, Details, and Quantities 2-119
2-2.13 Utility Plans and Details 2-125
2-2.14 Transportation Management Plans 2-129
2-2.15 Stage Construction, Traffic Handling Plans, and Detours 2-135
2-2.16 Construction Area Signs 2-151
2-2.17 Pavement Delineation Plans, Details and Quantities 2-155

Return to Main Table of Contents

SECTION PAGE NO.

2-2. PROJECT PLAN SHEET - SPECIFIC DATA AND SAMPLES (cont'd)

2-2.18 Summary of Quantities 2-165
2-2.19 Sign Plans, Details, and Quantities 2-175
2-2.20 Retaining Wall Plans, Details and Quantities 2-181
2-2.21 Sound Wall Plans, Details, and Quantities 2-187
2-2.22 Planting and Irrigation Plans, Details and Quantities 2-193
2-2.23 Signal, Lighting, and Electrical System Plans and Details 2-201
2-2.24 Structures (Bridge Plans and Details) 2-211
2-2.25 Cross Sections (Roadway) 2-229

2-3. AS BUILT PLANS 2-231

2-3.1 General. 2-231
2-3.2 Preparation Procedures (Roadway) 2-231
2-3.3 Preparation Procedures (Bridges and Structures). 2-232
2-3.4 Projects Not on State Highways 2-232

Return to Main Table of Contents

Section 2
Project Plans

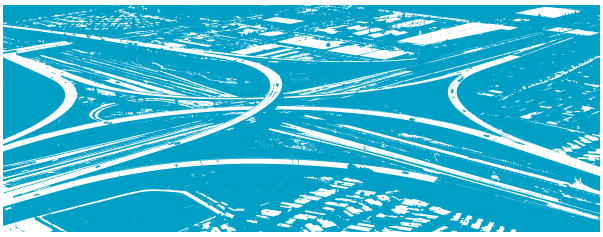

2-1 GENERAL

2-1.1 Purpose

Project plans are engineering CADD drawings which contain information from which contractors prepare bids, surveyors stake the contracts, successful bidders construct projects, and engineers inspect the contractors' work. These plans become permanent records for future reference.

2-1.2 General Standards

Project plans shall be prepared following the standards set forth in this section. Additional standards and procedures for preparing CADD drawings are contained in the CADD Users Manual of Instructions. CADD use shall be maximized for project plan preparation.

Plan sheets in conjunction with other contract documents must contain all data necessary for bidding, building, and inspecting the project.

Final project plan sheets used for bidding, building, and inspecting projects are printed in the 279 mm x 432 mm (11"x17") size. This printed size is one-half of the standard sheet size used to develop the project plans.

Lines and lettering must be of adequate size and weight to produce legible reproductions (copies). Line work shall conform to the requirements in Section 1-2.1 of this manual. Lettering sizes shall conform to the requirements in Section 1-2.2 of this manual.

Caltrans symbols and abbreviations shown in the Standard Plans and Caltrans CADD Cell Library shall be used in the preparation of project plans.

Project plans are to be based on the metric system. See Section 2-1.3 for use of the metric system in plan preparation.

2-1.2(A) Project Plan Sheet Formats

Project plan sheet formats as contained in the Caltrans CADD Cell Library are to be used for project plan preparation. See Figures 2-1A and 2-1B for some of the sheet formats available. Basic sheet configurations for full plan, detail, and profile sheets are shown in Figures 2-1C and 2-1D.

Return to Section 2 Table of Contents, page 3-2

FIGURE 2-1A

BASIC PLAN SHEET FORMATS FOR THE PREPARATION OF PROJECT PLANS

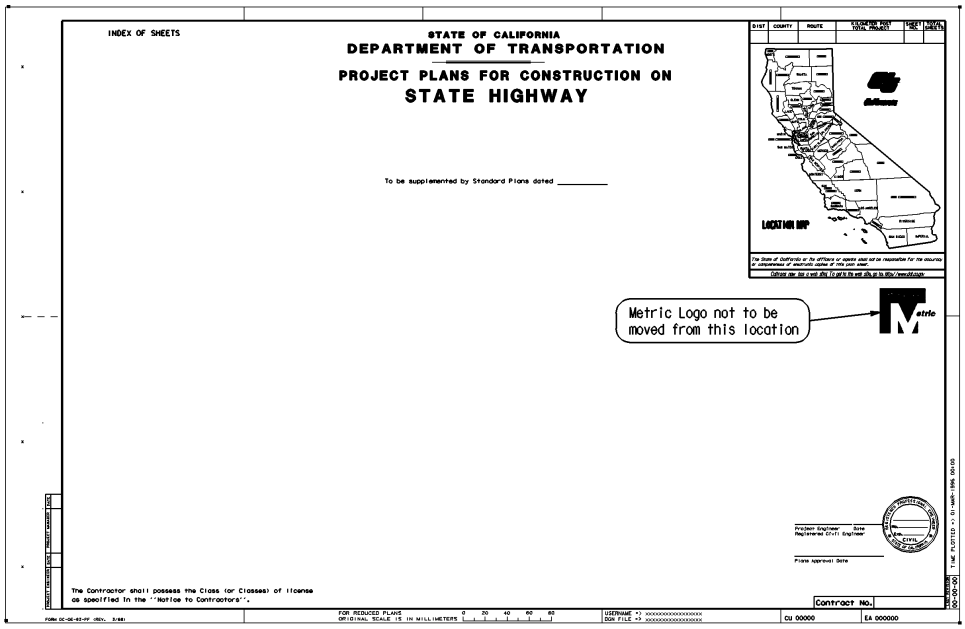

Description: TITLE SHEET (AC=TITLE) [Use for all title sheets]

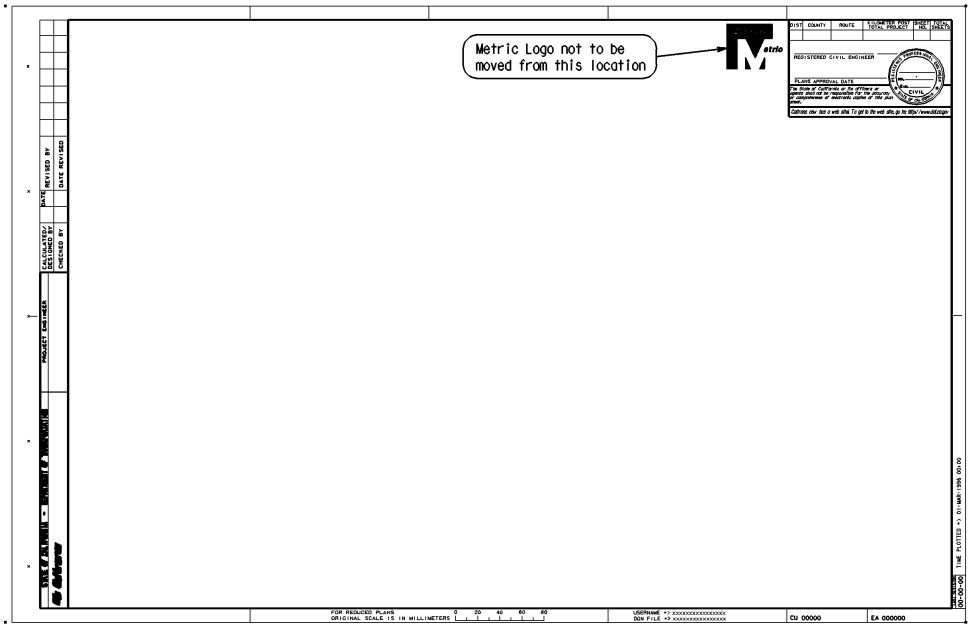

Description: FULL PLAN SHEET (AC=FULPLN) [Use for Layouts, Typical Cross Sections, Drainage Details, Construction Details, Contour Grading, Sign Plans, etc.]

NOTE: IN ADDITION TO THE SHEET FORMATS SHOWN, OTHER FORMATS SUCH AS THOSE USED FOR THE DRAINAGE QUANTITIES SHEETS ARE AVAILABLE IN THE CALTRANS CADD CELL LIBRARY.

Return to Section 2 Table of Contents, page 2-1

FIGURE 2-1B

BASIC PLAN SHEET FORMATS FOR THE PREPARATION OF PROJECT PLANS

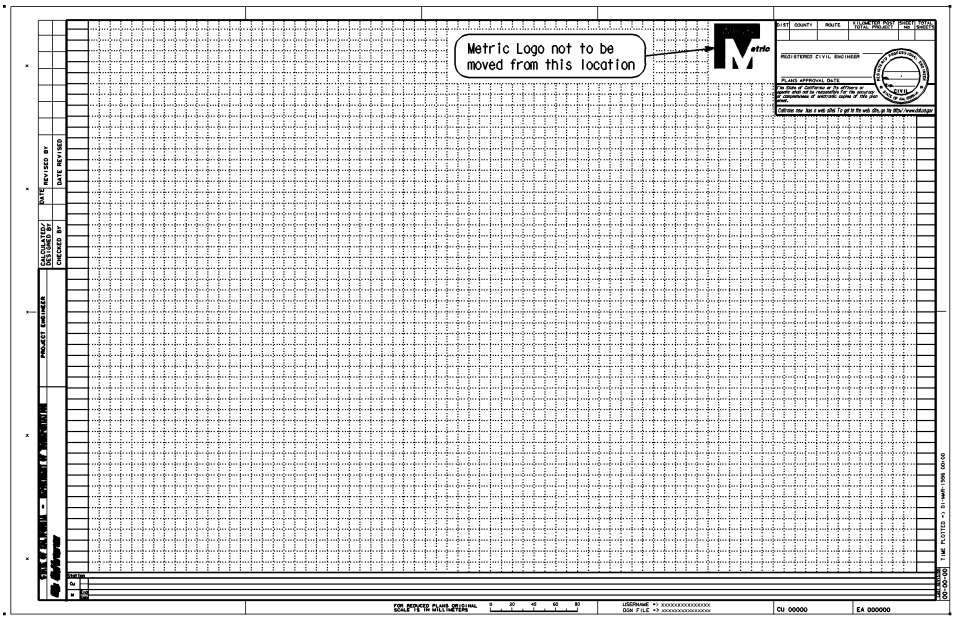

Description: FULL PROFILE SHEET (AC=FULPLN and AC=PROFIL) [Use for Roadbed Profiles, Drainage Profiles, Sewer Profiles, and Superelevation Diagrams]

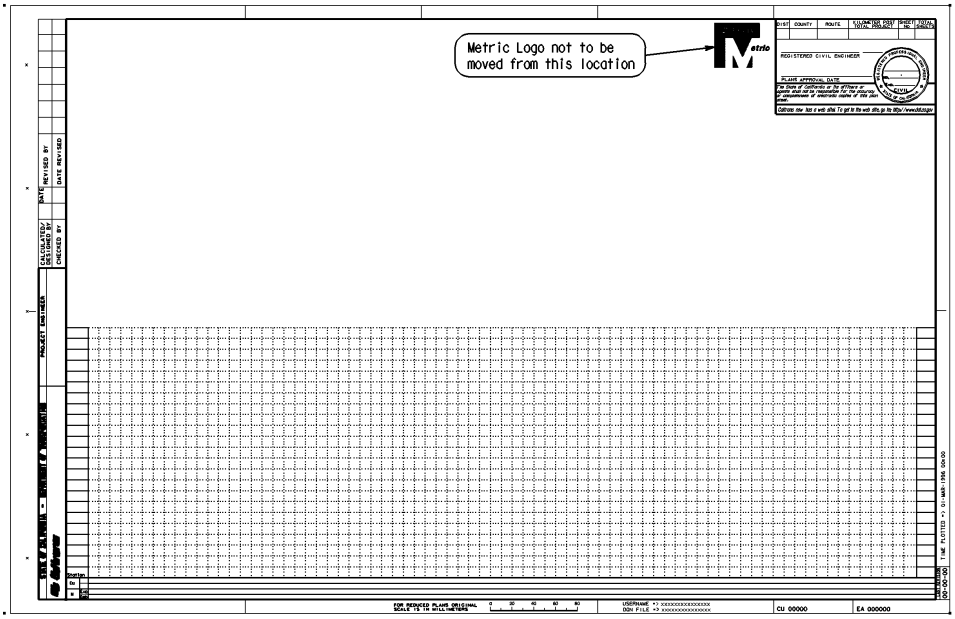

Description: PLAN AND PROFILE SHEET (AC=FULPLN and AC=PLNPRO) [Use for combined Layouts and Roadbed Profiles. Superelevation Diagrams may be included on the grid profile portion of the sheet where sufficient space is available and such addition will not produce sheets which are cluttered, unreadable or confusing.]

NOTE: IN ADDITION TO THE SHEET FORMATS SHOWN, OTHER FORMATS SUCH AS THOSE USED FOR THE DRAINAGE QUANTITIES SHEETS ARE AVAILABLE IN THE CALTRANS CADD CELL LIBRARY.

Return to Section 2 Table of Contents, page 2-1

FIGURE 2-1C

BASIC SHEET CONFIGURATION
FULL PLAN SHEET OR DETAIL SHEET

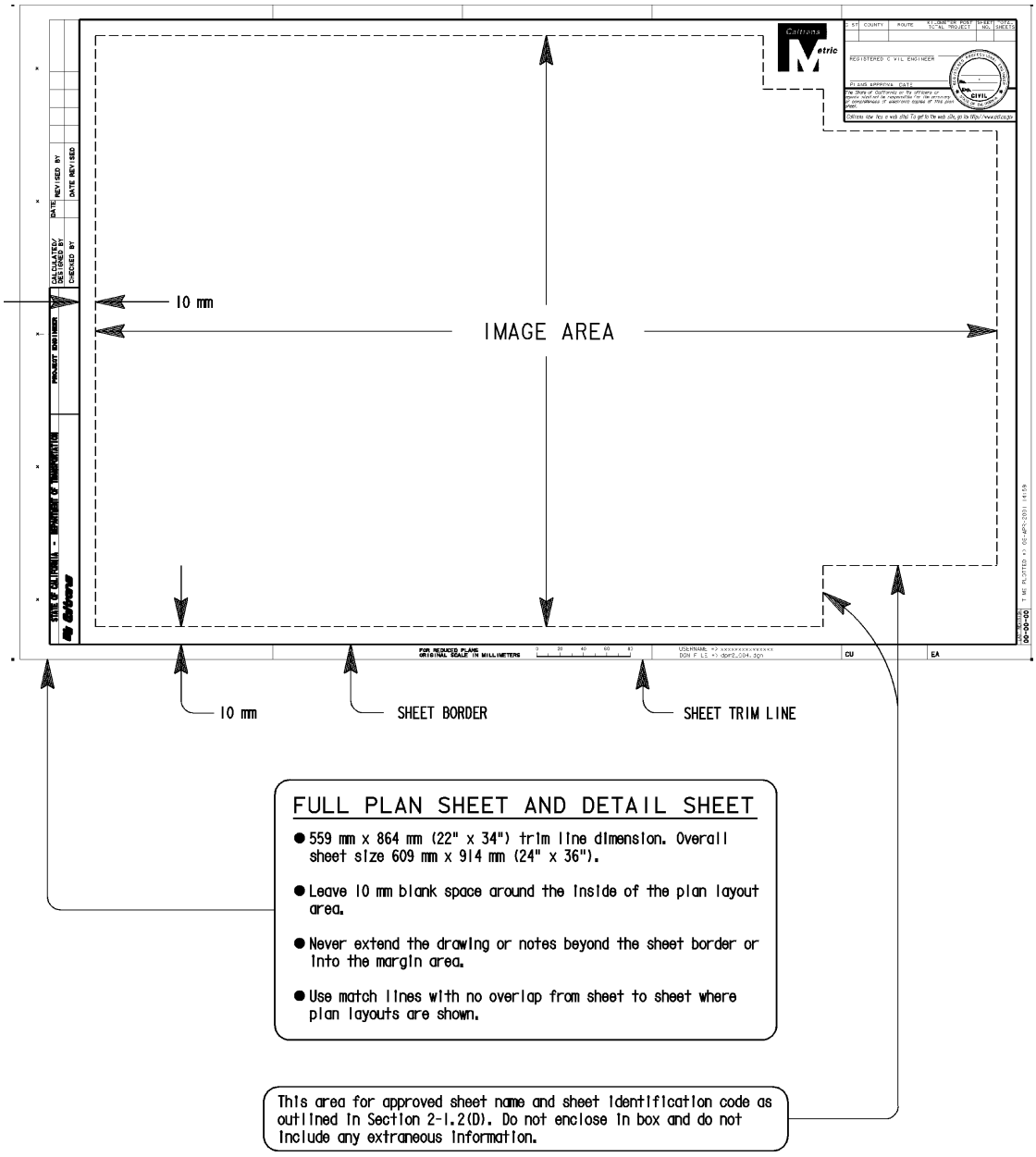

Return to Section 2 Table of Contents, page 2-1

FIGURE 2-1D

BASIC SHEET CONFIGURATION
COMBINATION OF PLAN AND PROFILE ON SAME SHEET

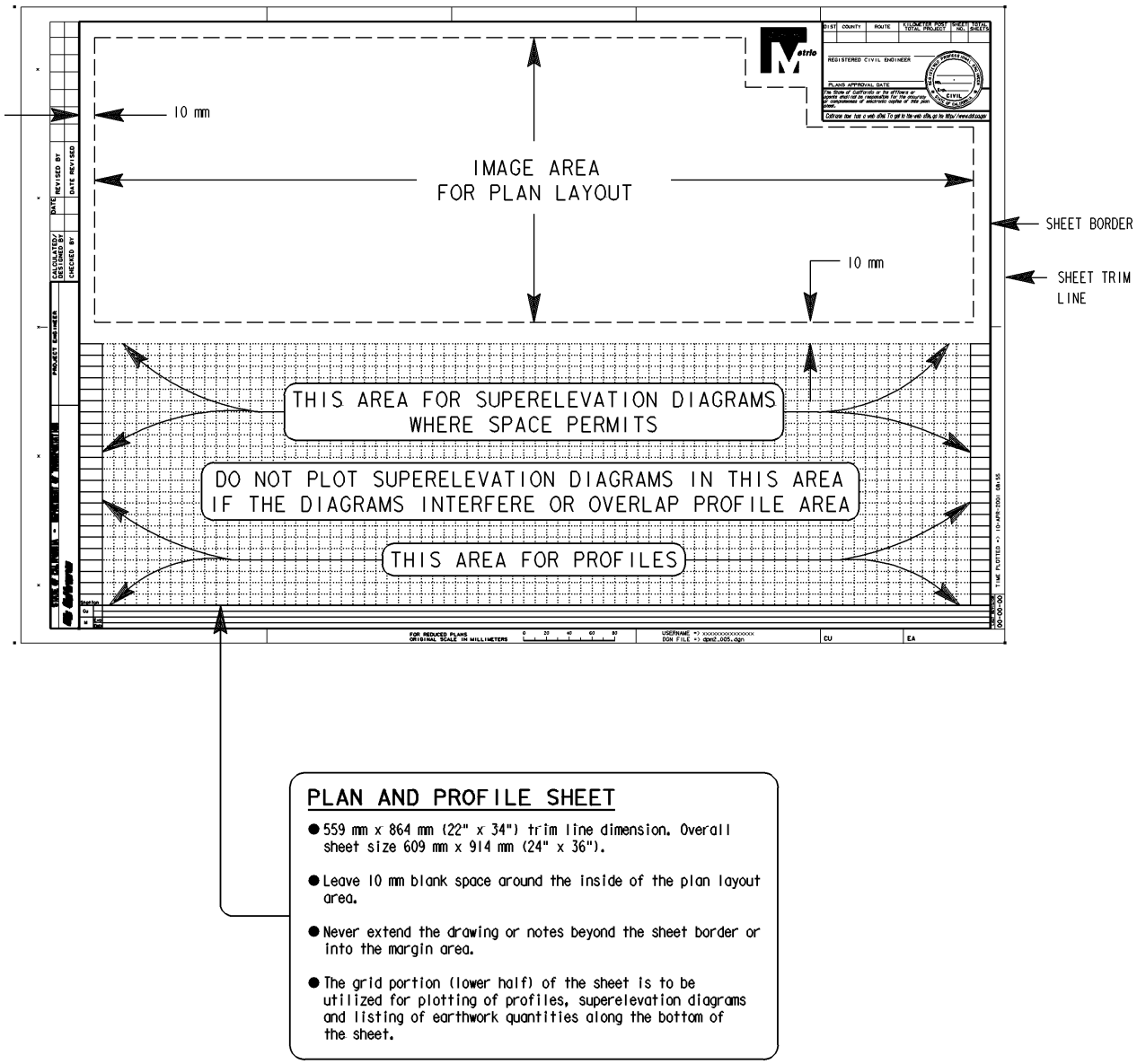

PLAN AND PROFILE SHEET

- 559 mm x 864 mm (22" x 34") trim line dimension. Overall sheet size 609 mm x 914 mm (24" x 36").
- Leave 10 mm blank space around the inside of the plan layout area.
- Never extend the drawing or notes beyond the sheet border or into the margin area.
- The grid portion (lower half) of the sheet is to be utilized for plotting of profiles, superelevation diagrams and listing of earthwork quantities along the bottom of the sheet.

Return to Section 2 Table of Contents, page 2-1

2-1.2(B) Electronic Plan Signatures and Project Development Names

(a) Title Sheet Signatures **-** The title sheet of the project plans shall have the license seal and signature of the lowest classification licensed person in responsible charge for preparation of the entire project. Only one license seal and number with associated signature shall appear on the sheet. The printed name, registration number and license expiration date shall appear within the generic registration seal on the line adjacent to the seal. The signature shall be electronically affixed to the title sheet. In all cases, the words "Registered Civil Engineer" or equivalent designation must appear with the registrant's signature. See Figure 2-3 for title sheet signature and license seal information.

(b) Title Sheet Project Development Names **-** For projects prepared by Caltrans, the printed name of the individual involved in the development of the entire project is to be placed in the "Project Engineer" name block space located in the lower left margin of the title sheet. The printed name of the project manager shall also be included as part of the name block information. Printed names included in the name blocks shall not have any designation indicating professional status. See Figure 2-4 for project development names required on the title sheet of Caltrans prepared projects.

For projects prepared by consultants or local agencies, the Caltrans engineer or project manager providing design oversight shall have his/her printed name, signature, registration number, and date of signature included in the name block spaces located in the lower left margin of the title sheet. The design oversight approval note shall be affixed in the proximity to the name block. See Figure 2-4 for project development names required on the title sheet of consultant or local agency prepared projects.

(c) Structure General Plan Sheet Signature and Structure Development Names **-** The general plan of a structure shall have the license seal and signature of the lowest classification licensed person in responsible charge for preparation of the plans for an entire structure. Only one licensed seal and number with associated signature shall appear on the sheet. The printed name, registration number and license expiration date shall appear within the generic registration seal. The registrant's signature and date signed shall be outside the registration seal and within the signature block on the line provided in the upper right hand corner of the sheet. The signature shall be electronically affixed to the general plan sheet. In all cases, the words "Registered Civil Engineer" or equivalent designation must appear with the registrant's signature. The signature of the Design Engineer and the printed names of individuals involved in the development of the general plan sheet are to be placed in the spaces provided along the bottom of the sheet.

(d) Individual Plan Sheet Signature **-** Individual project plan sheets, other than title sheets, shall have the license seal and signature of the licensed civil engineer, electrical engineer, mechanical engineer, geologist, architect or landscape architect who is knowledgeable about, and in responsible charge for developing that plan. Only one license seal and number with associated signature shall appear on the sheet. Licensed traffic engineers are not authorized to seal and sign plans. The printed name, registration number and license expiration date shall appear within the generic registration seal. The registrant's signature and date signed shall be outside the registration seal and within the signature block on the line provided in the upper right hand corner of the sheet. The signature shall be electronically affixed to the plan sheet. In all cases, the words "Registered Civil Engineer" or equivalent designation must appear with the registrant's signature. Do not add job titles such as "Utility Engineer", "Traffic Engineer", "Project Studies Engineer", etc. See Figure 2-5 for individual plan sheet signature and license seal information.

Return to Section 2 Table of Contents, page 2-30

(e) Individual Plan Sheet Development Names - For projects prepared by Caltrans, individual project plan sheets, other than title sheets, shall have the printed names of the functional area, project manager, and the individual(s) involved in the development of the plan sheet. The names are to be placed in name block spaces located in the lower left margin of the sheet. On Office of Structures Design plans, the printed names of individuals involved in the development of the plan sheet are to be placed in the spaces provided along the bottom of the sheet. Printed names included in name blocks of individual plan sheet shall not have any designation indicating professional status. Do not place additional signature blocks other than those shown on the approved sheet formats in the Caltrans CADD Cell Library. See Figure 2-6 for project development names required on individual plan sheets of Caltrans prepared projects.

On individual project plan sheets developed by consultants or local agencies, the Caltrans person providing oversight for that plan, shall have his/her name printed in the name block space identified as "Project Engineer". The words "Project Engineer" shall be removed and replaced with the words "Design Oversight". On structure plans the name block space is designated as "Design Oversight". See Figure 2-6 for project development names required on individual plan sheets of consultant or local agency prepared projects.

(f) Work Financed by Others - Where the work shown on an individual plan sheet, other than the title sheet, is to be financed by a firm (permittee) or local agency, section (d) above shall apply. The firm or local agency may place their name and address immediately below the signature block located in the upper right-hand corner of the individual plan sheet. Where a firm or local agency finances and prepares the entire project, their name and address may be placed in the lower right-hand corner of the title sheet. A consultant, that prepares the entire project, shall place the company name and address in the same location. Logos, telephone numbers, or artwork is not permitted. See Figures 2-3 and 2-5 for placement of the name and address of firms, local agencies, or consultants on plan sheets and title sheets.

(g) Caltrans Standard Plans - Standard plan sheets are to be signed by the lowest classification licensed person in responsible charge for preparation of the individual standard plan sheet.

(h) Standard Drawings from Other Agencies - Standard drawings of other agencies, when applicable to the project, shall be included as part of the project plans. Reference only to the standard drawing number is not acceptable. Such incorporated standard drawings shall be legible when reduced to the 279 mm x 432 mm (11" x 17") size. They shall have the signature, date signed and seal of the lowest classification licensed person in responsible charge for preparation of the plans. Generally, the Caltrans project engineer will sign these sheets.

Return to Section 2 Table of Contents, page 2-30

FIGURE 2-3

TITLE SHEET SIGNATURE
(Lower Right Corner of Title Sheet)

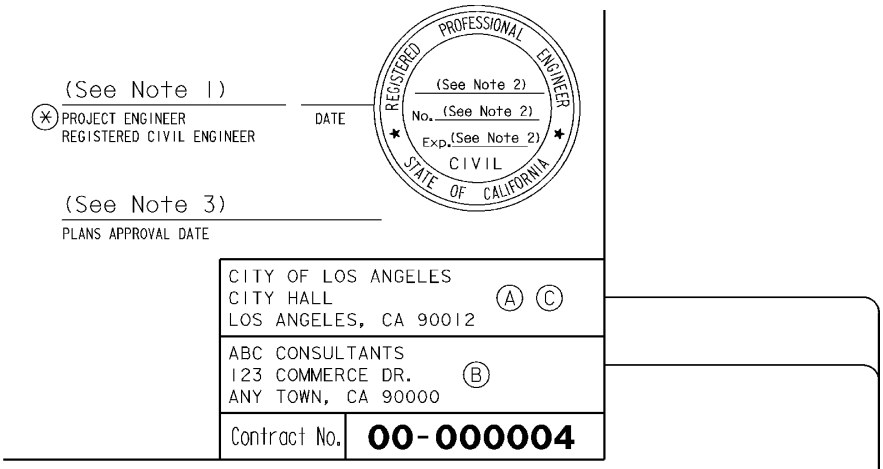

(*) JOB TITLE MAY BE USED WITH THE TITLE SHEET SIGNATURE.

GENERAL NOTES:

a) The title sheet of the project plans shall be signed by the lowest classification licensed person in responsible charge for preperation of the entire project.

b) Only one seal with associtaed signature shall appear on the title sheet.

c) Additional seal, license number and signature of supervisors and managers shall not be placed on the title sheet.

(A) Where the entire project is financed and prepared by a permittee or agency, the name and address of the firm (permittee) or agency shall be placed in this location on the title sheet.

(B) Where a consultant prepares the entire project for the firm (permittee) or agency, the firm name and address of the consultant shall be placed in this location.

(C) Where a consultant prepares the entire project for Caltrans, the firm name and address of the consultant shall be placed in this location.

Only names and addresses of the firm, agency and consultant shall be shown. Do not use logos, telephone numbers, or artwork.

NOTES:

1. Signature and date signed of person in responsible charge for preparation of the entire project. Add date signed (month/day/year, e.g., 4/27/01) on same line and adjacent to signature.

2. Name, Registration Number and License Expiration Date of person whose signature is affixed to this sheet (see Note 1). (FT=2, TX=1.5, WT=1)

3. The Plans Approval Date will be added in DES-OE by Caltrans after all confirmed changes to the plans have been made.

Return to Section 2 Table of Contents, page 2-6, page 2-7, page 2-30

FIGURE 2-4

TITLE SHEET PROJECT DEVELOPMENT NAME BLOCK
(Lower Left Margin of Title Sheet)

Projects Prepared by Caltrans

PROJECT ENGINEER	DATE	PROJECT MANAGER	DATE
①		②	

NOTES:

① Printed name of the individual involved in the development of the entire project. The word "Engineer" shall be removed and the appropriate word placed in the name block for non-engineering projects, e.g., Project "Architect".

② Printed name of project manager.
The title sheet name block may be revised as shown below where the project manager is not the design engineer for the project.

PROJECT ENGINEER	DATE	DESIGN ENGINEER	DATE	PROJECT MANAGER	DATE
①		③		②	

③ Printed name of the design engineer.

Projects Prepared by Consultants or Local Agencies

PROJECT ENGINEER	DESIGN OVERSIGHT APPROVAL	REGISTRATION NO.	DATE
④	PRINTED NAME ⑤ SIGNATURE	⑥	

⑦ Approved as to impact on State facilities and conformance with applicable State standards and practices and that technical oversight was performed as described in the California Department of Transportation A & E Consultant Service Manual.

NOTES:

④ Printed name of the individual involved in the development of the entire project. The word "Engineer" shall be removed and the appropriate word placed in the name block for non-engineering projects, e.g., Project "Architect".

⑤ Printed name and signature in this name block of Caltrans licensed person providing design oversight approval.

⑥ Registration number and date of signature of Caltrans licensed person whose signature is in the design oversight approval name block.

⑦ Enter this note in the lower left side of the Title sheet perpendicular to the bottom portion of the sheet and in proximity of the Title Sheet Project Development Name Block as shown above.

Return to Section 2 Table of Contents, page 2-6

FIGURE 2-5

INDIVIDUAL PLAN SHEET SIGNATURE
(Upper Right Corner of Plan Sheet)

DIST	COUNTY	ROUTE	KILOMETER POST TOTAL PROJECT	SHEET NO.	TOTAL SHEETS
←		(See Note 1)			→

(See Note 2)
REGISTERED CIVIL ENGINEER DATE

(See Note 4)
PLANS APPROVAL DATE

REGISTERED PROFESSIONAL ENGINEER
(See Note 3)
No. (See Note 3)
Exp. (See Note 3)
CIVIL
STATE OF CALIFORNIA

CITY OF LOS ANGELES
CITY HALL
LOS ANGELES, CA 90012 (A) (C)

ABC CONSULTANTS
123 COMMERCE DR. (B)
ANY TOWN, CA 90000

The State of California or its officers or agents shall not be responsible for the accuracy or completeness of electronic copies of this plan sheet.

Caltrans now has a web site! To get to the web site, go to: http://www.dot.ca.gov

* If other than CIVIL revise appropriately, e.g., ELECTRICAL, MECHANICAL, LAND SURVEYOR, GEOLOGIST, LANDSCAPE ARCHITECT. BUILDING ARCHITECT (DO NOT USE JOB TITLES).

GENERAL NOTE:

Only one seal and signature of the appropriate licensed person in responsible charge for developing the plan sheet shall be shown on each individual plan sheet.

(A) Where the work shown on the plan sheet is not financed by Caltrans, but is financed by a permittee or agency, the name and address of the firm (permittee) or agency shall be placed in this location on the plan sheet.

(B) Where a consultant prepares the plan sheet for the firm (permittee) or agency, the firm name and address of the consultant shall be placed in this location.

(C) Where a consultant prepares the plan sheet for Caltrans, the firm name and address of the consultant shall be placed in this location.

Only names and addresses of the firm, agency and consultant shall be shown. Do not use logos, telephone numbers, or artwork.

NOTES:

1. For information to be placed in this area, see Section 2-1.2(C).
2. Signature and date signed of person in responsible charge for preparation of the plan sheet. Add date signed (month/day/year, e.g., 4/27/01) on same line and adjacent to signature.
3. Name, Registration Number and License Expiration Date of person whose signature is affixed to this sheet (see Note 2). (FT=2, TX=1.5, WT=1)
4. The Plans Approval Date will be added in DES-OE by Caltrans after all confirmed changes to the plans have been made.

Return to Section 2 Table of Contents, page 2-6, page 2-7

FIGURE 2-6

INDIVIDUAL PLAN SHEET DEVELOPMENT NAME BLOCK ⊛
(Left Side of Plan Sheet)

Projects Prepared by Caltrans

③

STATE OF CALIFORNIA - DEPARTMENT OF TRANSPORTATION	PROJECT ENGINEER	CALCULATED/ DESIGNED BY		DATE	REVISED BY							
Caltrans ①	②	CHECKED BY			DATE REVISED							

NOTES:

① Enter name of the functional area responsible for development of the plan sheet, e.g., DESIGN, TRAFFIC OPERATIONS, etc. Where one Caltrans District develops the plan sheet for another Caltrans District, the functional area shall be preceded with the preparer's District Number, e.g., 01-DESIGN.

② Printed name of person in functional area responsible for development of the plan sheet.

③ Printed initials of the person responsible for the work indicated. Use month and year for date.

⊛ Structure plan sheets have other name block formats.

Projects Prepared by Consultants or Local Agencies

⑥

STATE OF CALIFORNIA - DEPARTMENT OF TRANSPORTATION	PROJECT ENGINEER	CALCULATED/ DESIGNED BY		DATE	REVISED BY							
Caltrans ④	⑤	CHECKED BY			DATE REVISED							

NOTES:

④ No entry is to be made in this name block when the plan sheet is prepared by a consultant or local agency.

⑤ If project is developed by consultant or local agencies, the Caltrans person providing the oversight to ensure the plan sheet is designed in accordance with the Department's practices, shall have his/her name printed in this name block space. The words "Project Engineer" shall be removed and replaced with the words "Design Oversight".

⑥ Printed initials of the person responsible for the work indicated. Use month and year for date.

⊛ Structure plan sheets have other name block formats. Sheets will be provided by Caltrans Division of Engineering Services.

[Additional name block shall not be added to the plan sheet formats.]

Return to Section 2 Table of Contents, page 2-7

2-1.2(C) Project Identification Blocks and County Abbreviations

For plans CADD prepared and transmitted electronically, the District, County, Route, Kilometer Post(s), and individual sheet numbers are to be included in the Project Identification Block. The number of total sheets shall be left blank. Division of Engineering Services-Office of Office Engineer (DES-OE) will insert the total sheet number. The county or counties in which the project is located shall be abbreviated as shown in Table 2-1.2.

PROJECT IDENTIFICATION BLOCK

(Upper Right Corner of Plan Sheet)

DIST.	COUNTY	ROUTE	KILOMETER POST TOTAL PROJECT	SHEET NO.	TOTAL SHEETS

(1) PROJECT CONSTRUCTION IS ON ONE ROUTE

(a) The project consists of one location on one route with a length of construction greater than 0.3 km. The “From...To...” format is used in the project description to describe the location. A slash is used between the associated KPs for beginning and end of construction.

Example: 07-LA-05-R74.9/R79.3

(b) The project consists of two locations on one route (with individual lengths of construction 0.3 km or greater). The “From...To...” format is used in the project description to describe each location. A slash is used between the associated KPs for beginning and end of construction for each location and a comma is used between the two sets of KPs.

Example: 07-LA-5-R74.9/R79.3, R81.2/R83.5

(c) The project consists of two locations on one route with one construction location 0.3 km or greater in length and one construction location less than 0.3 km (spot location). The “From... To...” format is used in the project description to describe the location 0.3 km or greater in length. A slash is used between the associated KPs for beginning and end of construction for this location followed by a comma then followed by a single KP to describe the spot location.

Example: 07-LA-5-R74.9/R77.6, R78.9

(d) The project consists of two locations on one route with individual lengths of construction less than 0.3 km (spot locations). A single KP is used to describe each location separated by a comma.

Example: 06-Fre-99-43.9, 45.7

Return to Section 2 Table of Contents

(e) The project consists of one location on one route with an individual length of construction less than 0.3 km (spot location). A single KP is used to describe the location.

Example: 01-Men-1-80.8

(f) The project consists of one or more locations within 0.6 km of the center of a route separation (measured radially). A single KP is used for each route to describe the location.

Example: 07-LA-5,118-63.4,18.3

(g) The project consists of three or more locations on the same route at various locations. The "From...To..." format is used in the project description to describe the beginning of the first location as the beginning point of construction or highway planting and the end of the last location as the end point of construction or highway planting. A slash is used between the associated KPs for beginning and end of construction.

Example: 07-LA-101-0.2/7.2

(h) The project consists of three or more locations on the same route at various locations and the project locations cover a lengthy section of highway (greater than 10 km). The "From...To..." format is used in the project description to describe the beginning of the first location as the beginning point of construction or highway planting and the end of the last location as the end point of construction or highway planting. A slash is used between the associated KPs for beginning and end of construction.

Example: 11-Imp-8-R65.8/R155.9

(2) PROJECT CONSTRUCTION IS ON TWO ROUTES

(a) The project consists of two locations which are on two different routes with each length of construction 0.3 km or greater. The "From...To..." format is used in the project description to describe each location. Both routes are shown with a comma between them. A slash is used between the associated KPs for the beginning and end of construction for each location and a comma is used between the two sets of KPs. The order of listing the routes is to match the order of listing the KPs.

Example: 11-SD-8, 67-26.2/26.5, R0.2/R0.5

(b) The project consists of two locations which are on two different routes where the length of construction on one route is 0.3 km or greater and the length of construction on the other route is less than 0.3 km. Both routes are shown with a comma between them. The "From... To..." format is used in the project description to describe the location 0.3 km or greater. A slash is used between the associated KPs for the beginning and end of construction for this location followed by a comma then followed by a single KP to describe the spot location. The order of listing the routes is to match the order of listing the KPs.

Example: 11-SD-8, 67-26.2/26.5, R0.5

(continued)

(c) The project consists of two locations which are on two different routes with individual lengths of construction less than 0.3 km (spot locations). Both routes are shown with a comma between them. A single KP is used to describe each location separated by a comma. The order of listing the routes is to match the order of listing the KPs.

Example: 11-SD-8, 67-26.5, R0.5

(3) PROJECT CONSTRUCTION IS ON THREE OR MORE ROUTES

(a) The project consists of three or more locations spread over two or more routes or two or more counties at various locations. All counties, in which the project is located, are listed with a comma between them. All routes, where the project is located, are listed in numerical order. The order of listing the counties does not generally match the order of listing the routes. No KPs are listed in the "Kilometer Post Block". "Var" is to be used in the "Kilometer Post Block". "Var" represents the various KPs of the different routes. Whenever "Var" is used in the "Kilometer Post Block", a table with a heading of "Locations of Construction" shall be included on the title sheet. The table shall list all of the project's location numbers and associated counties, routes, and KPs.

Example: 08-SBd, Riv, LA-18, 71, 138, 173, 189, 247-Var

Return to Section 2 Table of Contents

TABLE 2-1.2

COUNTY ABBREVIATIONS

COUNTY	COUNTY ABBR.
Alameda	Ala
Alpine	Alp
Amador	Ama
Butte	But
Calaveras	Cal
Colusa	Col
Contra Costa	CC
Del Norte	DN
El Dorado	ED
Fresno	Fre
Glenn	Gle
Humboldt	Hum
Imperial	Imp
Inyo	Iny
Kern	Ker
Kings	Kin
Lake	Lak
Lassen	Las
Los Angeles	LA
Madera	Mad
Marin	Mrn
Mariposa	Mpa
Mendocino	Men
Merced	Mer
Modoc	Mod
Mono	Mno
Monterey	Mon
Napa	Nap
Nevada	Nev

COUNTY	COUNTY ABBR.
Orange	Ora
Placer	Pla
Plumas	Plu
Riverside	Riv
Sacramento	Sac
San Benito	SBt
San Bernardino	SBd
San Diego	SD
San Francisco	SF
San Joaquin	SJ
San Luis Obispo	SLO
San Mateo	SM
Santa Barbara	SB
Santa Clara	SCl
Santa Cruz	SCr
Shasta	Sha
Sierra	Sie
Siskiyou	Sis
Solano	Sol
Sonoma	Son
Stanislaus	Sta
Sutter	Sut
Tehama	Teh
Trinity	Tri
Tulare	Tul
Tuolumne	Tuo
Ventura	Ven
Yolo	Yol
Yuba	Yub

Use the above list for the correct abbreviations of the counties.
Use upper and lower case lettering as shown.

Return to Section 2 Table of Contents, page 2-12

2-1.2(D) Sheet Identification Codes, Sheet Names, and Plan Order

A coding system maintains sheet order during the design and construction of the project. The larger the project, the more important a coding system becomes because it facilitates sorting out specific data and is used extensively for cross referencing.

Coding shall consist of identifying each sheet of plans by the appropriate code letter as provided herein and by numbering those sheets consecutively, e.g., L-1, L-2, L-3, etc. The title sheet does not require a sheet identification code.

The project plan sheet name and sheet identification code are both required on every sheet, except the title sheet. They should be placed inside the sheet border at the lower right-hand corner of each sheet.

When Office of Structures Design prepared plans (e.g. Sign Structure, Retaining Wall, etc.) are included in the roadway portion of the plans, the sheet name and sheet identification code shall be placed on these sheets as provided above.

The sheet name such as Layout, Drainage, etc., identifies the plan for indexing. The codes such as L-1, D-1, etc., identify individual project plan sheets for cross referencing.

Except for projects consisting of work at various locations, the project plan sheet name and sheet identification code shall be the only Sheet Identification shown. Where the project consists of work at various locations, the work location number unique to that sheet may also be shown in the lower right-hand corner. The project description shall not be repeated on individual plan sheets. The project description shall appear only on the Title Sheet.

On combination sheets where more than one type of work is being shown, the sheet identification code shall be the code letter for the first type of work shown in the project plan sheet name. (Example: The code letter for a "Pavement Delineation and Sign Plan" is PD. Generally, combining should be limited to two types of work. When the layout sheet contains a combination of work, do not combine sheet names on the layout sheet. Use the sheet name "Layout" only.

ROADWAY AND STRUCTURE PLANS

A set of project plans may contain a few or all of the following sheets. Use the following code letters and arrange sheets in the order shown.

ID CODE LETTER	SHEET NAME
—	**Title Sheet**
X	**Typical Cross Sections**
K	**Key Map and Line Index**
L	**Layout** (A sheet which contains only plan layout information or a sheet which contains both plan layout and profile information with or without the superelevation diagram shown)
P	**Profile** (A sheet which contains plan profile information with or without the superelevation diagram shown)
SE	**Superelevation Diagram** (A sheet which contains only superelevation diagram information)
C	**Construction Details**
WPC	**Temporary Water Pollution Control Plan, Details, and Quantities**
G	**Contour Grading**
D	**Drainage Plan, Profiles, Details, and Quantities**
SS	**Sanitary Sewer Plan, Profiles, Details, and Quantities**
U	**Utility Plan and Details**

Return to Section 2 Table of Contents

ROADWAY AND STRUCTURE PLANS (cont'd)

ID CODE LETTER	SHEET NAME
TM	**Transportation Management Plan**
SC	**Stage Construction, Traffic Handling Plan and Detours**
TH	**Traffic Handling Plan** (A sheet which contains only traffic handling information and is not included as a SC sheet)
DE	**Detour** (A sheet which contains only detour information and is not included as a SC sheet)
CS	**Construction Area Signs**
PD	**Pavement Delineation Plan, Details, and Quantities**
Q	**Summary of Quantities**
S	**Sign Plan, Details, and Quantities**
R	**Retaining Wall Plan, Details, and Quantities**
SW	**Sound Wall Plan, Details, and Quantities**
HP	**Plant List, Planting Plan, Irrigation Plan, etc.** (See sheet names and order below. Use HP ID Code when part of a highway construction or building construction project)
E	**Signal, Lighting, and Electrical Systems Plans and Details** (See Section 2-2.23 for approved plan sheet names for E sheets)
—	**Revised and/or New Standard Plans** (Issued and inserted by DES-OE)
—	**Structure Plans** (Office of Structures Design)

Section 2-2 contains specific data pertaining to the sheets listed above. Examples of most of these sheets are included in Section 2-2 of this manual.

HIGHWAY PLANTING PLANS

A set of highway planting plans may contain a few or all of the following sheets. Arrange sheets in the order shown.

Use the following code letters and sheet names for highway planting plan sheets when the project consists entirely of planting and irrigation work.

ID CODE LETTER	SHEET NAME
—	**Title Sheet**
K	**Key Map***
WPC	**Temporary Water Pollution Control Plan and Details**
PL	**Plant List**
PR	**Plant Removal Plan***
RC	**Roadside Clearing Plan***
MA	**Maintain Existing Plants Plan***
P	**Planting Plan**
IR	**Irrigation Removal Plan***
I	**Irrigation Plan**

Return to Section 2 Table of Contents

HIGHWAY PLANTING PLANS (cont'd)

ID CODE LETTER	SHEET NAME
PI	**Planting and Irrigation Plan**
SD	**Sprinkler Schedule** (Use this title if only a sprinkler schedule is on this sheet)
SD	**Sprinkler Schedule and Details** (Use this title when a sprinkler schedule and details are on this sheet)
SD	**Details** (Use this title if only details are on this sheet)
IQ	**Irrigation Quantities**
EI	**Existing Irrigation Plan***
EU	**Existing Utilities Plan**
E	**Electrical Service (Irrigation) Plan***
CS	**Construction Area Signs**
EE	**Booster Pump - Electrical***
ME	**Booster Pump - Mechanical Electrical***
M	**Booster Pump - Mechanical***
—	**Revised and/or Standard Plans (etc.)**

***** Optional plan sheets. Use these sheets where additional space is required to more clearly show the work to be done.

When highway planting is to be included as part of a highway construction or building construction project, the sheet identification code letters shown above for projects consisting entirely of planting and irrigation work shall not be used. "HP" shall be used in place of the above sheet identifications codes. The "HP" sheet identification code shall be used on every sheet of the highway planting portion of the highway construction or building construction project, e.g., HP-1, HP-2, etc.

BUILDINGS AND PUMPING PLANT PLANS

A set of building work plans may contain a few or all of the following sheets.

Use the following code letters and sheet names. Arrange sheets in the order shown.

ID CODE LETTER	SHEET NAME
—	**Title Sheet**
—	(Civil and Landscaping Plans [Use the order, identification code letters and sheet names shown for roadway plans])
GP**	**General Plan** (General layout and index of Office of Structures Design work)
A	**Architectural Plans**
ST	**Structural Plans**
M	**Mechanical Plans**
EE	**Electrical Plans**

Return to Section 2 Table of Contents

BUILDINGS AND PUMPING PLANT PLANS (cont'd)

ID CODE LETTER	SHEET NAME
SS	**Sanitary Plans** (Sewers for buildings)
—	**Revised and/or etc.**

** The GP code letter is for the first plan sheet prepared by Office of Structures Design.

Use of the GP code is necessary to maintain the sheet order shown.

Depending on the amount of roadway work involved, building projects may be administered under either the Standard Specifications or the General Conditions. An early determination should be made for each project as to whether the Standard Specifications or the General Conditions are to be used.

2-1.3 Use of the Metric System

Caltrans has formally adopted the International System of Units (SI) as its preferred system of weights and measures.

Caltrans, in step with FHWA, has adopted the provisions of ASTM E380 "Standard Practice For Use of the International System of Units" as the authoritative reference to SI units of measurement.

When converting values to the metric system there are two methods: soft and hard. Soft conversion is an exact restating of an English unit of measurement in SI terms. Hard conversion is a statement of a previous dimension in convenient, rounded SI units.

For Example:

Soft Conversion - 10 ft. Shoulder = 3.05 m (10.0 ft.)

Hard Conversion - 10 ft. Shoulder = 3.0 m (9.84 ft.)

Land surveying measurements must be converted using the special conversion factor for the US Survey foot, rather than the standard conversion factor. The Geometronics Branch is advising all users of survey data about this special conversion factor. This also applies to all other measurements, such as centerlines, which are based on surveys. The conversion factor is: 1200/3937 ft./m. This is the definition of the US Survey foot as defined by, Section 8810, State of California Public Resources Code.

The SI system of measure is a modern form of the metric system. In the SI system the comma has been replaced by a space to separate digits into groups of three starting from the decimal point and moving to the left and right. (Exception: no space is used when there is four digits to the left or right of the decimal point and monetary values will continue to be expressed in the traditional manner). Numbers less than one should be written with a zero before the decimal point.

For Example:

3.878 632	95 278.6894
2043	0.213 18
Monetary value	$725,000.00

Where metric measurements are expressed using digit numbers, the metric unit symbol is to be used with the digit number with a space between the number and the unit symbol. (Exception: no space is used between the digit number and the degree symbol or between the degree symbol and the symbol for temperature).

For Example:

3.8 m	0.2 m	
300 mm	45˚	45˚C

Where no digit number is used with the metric unit, such as a reference to the unit of measure in a specification pay clause, the metric unit of measure is spelled out. Also, where the number is spelled out, the metric unit should be spelled out.

Return to Section 2 Table of Contents, Main Table of Contents, page 2-1, page 2-71, page 2-97, page 2-231

Special Rule: When a quantity is expressed as a number and a unit is used in an adjectival sense, it is preferable to use a hyphen instead of a space between the number and the unit name or between the number and the symbol.

For Example:

A three-meter pole.	The length is 3 m.
A 35-mm film.	The width is 35 mm.

However, no space is used between the digit number and the degree symbol or between the degree symbol and the symbol for temperature.

For Example:

a 90˚ angle	an angle of 90˚

Significant Digits & Rounding Values

Significant digits are any digits that are necessary to define the specific value or quantity. When converting values of units, consideration must be given to the implied or required precision of the value to be converted. The converted value must be carried to a sufficient number of digits to maintain the accuracy implied or required in the original quantity.

When measuring to the nearest 1 m, a distance may have been 157 m; this number has three significant digits. If the measurement had been made to the nearest 0.1 m, the measurement may have been 157.4 m; this number has four significant digits.

The addition, subtraction, multiplication, and division of SI values follow specific rules:

The rule for addition and subtraction states that the answer shall contain no significant digits farther to the right than occurs in the least precise number.

The rule for multiplication and division requires that the product or quotient shall contain no more significant digits than are contained in the number with the fewest significant digits used in the multiplication or division.

The difference between these two rules should be noted; the latter rule merely requires rounding of digits that lie to the right of the last significant digit in the least precise number.

For Example:

Addition: 113.2 + 1.43 = 114.63, rounded to 114.6

Subtraction: 113.2 - 1.43 = 111.77, rounded to 111.8

Multiplication: 113.2 x 1.43 = 161.876, rounded to 162

Division: 113.2 / 1.43 = 79.16, rounded to 79.2

The product and quotient are limited to three significant digits since 1.43 contains only three significant digits.

When rounding values, the following rules should be followed:

1. If the first digit discarded is less than 5, the last digit retained should not be changed. For example, 3.463 25, if rounded to four digits, would be 3.463; if rounded to three digits, 3.46.
2. If the first digit to be discarded is greater than or equal to 5 followed by at least one digit other than 0, the last digit retained should be increased by one unit. For example, 8.376 52, if rounded to four digits, would be 8.377; if rounded to three digits, 8.38.
3. If the first digit discarded is equal to 5, but is followed only by zeros, the last digit retained should be rounded upward if it is an odd number. No adjustment should be made if the last digit retained is an even number. For example, 4.365, when rounded to three digits, becomes 4.36. The number 4.355 would also round to the same value, 4.36, if rounded to three digits.

Large Numbers

As stated previously, no commas shall be used within a number. The preferred method of representing numbers with five or more digits on either side of the decimal point is to group the digits by three from the decimal point and separate the groups with a space. At the present time, Caltrans roadway design and drafting software cannot display numbers in this format. For CADD drawings with computer generated numbers, it is acceptable to display the digits without grouping.

Preferred	123 456.789 01
Acceptable	123456.78901
Not Acceptable	123,456.78901

Return to Section 2 Table of Contents, Main Table of Contents, page 2-1, page 2-71, page 2-97, page 2-231

The method of representing large numbers must be consistent throughout a product, such as Plan, Map, Report, etc.

Metric Plan Dimensioning

All dimensions on metric plans shall be shown in metric units only, with the following exceptions .

- Pertinent dimensions within railroad right of way shall be shown in dual units with metric units being primary (soft conversion) and English units in parenthesis. All other dimensioning on the plans shall be shown in metric only. Examples of pertinent dimensions would be right of way widths, horizontal and vertical clearances, rail elevations and track layout dimensioning. See Sections 2-2.24 and 3-2.6 of this manual.
- Plans utilizing As-Builts as base information should be rescaled and dropped out. As-Built dimensions which need to be provided shall be soft converted. See Section 2-3.1 of this manual.
- As-Built Log of Test Borings Sheets may be used in the imperial units provided that the metric layout line be placed on the plan view and tied to the original boring locations in dual dimensions (imperial and metric). See Section 2-2.24 of this manual.
- Right of Way Maps shall utilize metric units for project related changes, however original recorded units outside the affected area shall remain in the units of record.

Survey information on Right of Way maps showing property data should be expressed in meters, square meters, or hectares. When recorded data is included on Right of Way maps, it shall be expressed in its original units.

With the exception of the following listed project plan sheets, a note shall be placed on each plan sheet indicating the predominant length unit of measure:

- Title Sheet
- Key map and Line Index Sheet
- Plan sheets consisting entirely of quantity summaries. The unit of measure should be shown in the respective column headings for the quantities involved.

On the plan sheets where the predominant unit of measure note is used, the symbol indicating the predominant unit of measure should be omitted. All other units shall be so indicated by using the appropriate symbol.

For Example:

Note: All dimensions are in meters unless otherwise shown

300 millimeters is written as 300 mm

2.2 meters is written as 2.2

Where a descriptor note is used with the digit number for the predominant unit of measure as described in the above example, the unit symbol may be used with the digit number if the note could be misinterpreted.

For Example:

2 m trapezoidal earth ditch

If the unit symbol is omitted, the note could be interpreted as “2 trapezoidal earth ditches”.

Angular Measurements

Angular measurements shall retain Degree-Minute-Second.

Cross Slopes

Pavement cross slopes and superelevation shall be shown as a percent.

Side Slopes

Side slopes shall be expressed in nondimensional ratios. The vertical component is shown first and then the horizontal (Y:X). For slopes less than 45 degrees, the vertical component shall be unitary (for example, 1:20). For slopes over 45 degrees, the horizontal component shall be unitary (for example, 5:1) since the metric system does not use fractions.

Scales

Metric scales are a unitless ratio, such as, 1:500, 1:1000, or 1:2000. This means that 1 of any unit on the metric unit map or plan sheet equals to 500, 1000, or 2000 of the same unit on the ground. One meter on the map equals 500, 1000, or 2000 m on the ground. Or, ten millimeters on the map equals 5000, 10 000, or 20 000 mm on the ground.

Return to Section 2 Table of Contents, Main Table of Contents, page 2-1, page 2-71, page 2-97, page 2-231

***Scales** (continued)*

A horizontal scale ratio of 1:500 will typically replace the 1" = 50' imperial scale used in urban areas and some rural areas. A ratio of 1:200 is used in place of the 1" = 20' imperial scale. A ratio of 1:200 is used where greater detail is required than can be shown on the plan layouts.These sheets would typically be construction detail sheets, signal and lighting plans, etc. For projects in rural areas, a ratio of 1:1000 should be used to replace a 1" = 100' imperial scale.

Earthwork cross section plotting scales, both horizontal and vertical, should be 1:100 for rural projects and 1:50 for urban projects. Cross section intervals shall be 20 m or as required.

TABLE 2-1.3A

SCALES

Plan Sheets:

Imperial Scale	Metric Scale
3/4"=1'	1:20
1/2"=1'	1:20
3/8"=1'	1:50
3/16"=1'	1:50
1/4"=1'	1:50
1/8"=1'	1:100
1"=1'	1:10

Imperial Scale	Metric Scale	Major Station Tick Mark Interval
1"=2'	1:20	
1"=5'	1:50	
1"=10'	1:100	
1"=20'	1:200	100 m
1"=50' Base	1:500 Base	100 m
1"=100'	1:1000	100 m
1"=200'	1:2000*	500 m
1"=400'	1:5000*	1000 m

*Typically used for title sheets, route adoption maps, etc.

The typical length of a minor station tick mark is: 0.4 meter for 1:200 scale, 1.0 meter for 1:500, and 2.0 meters for 1:1000 scale. Major Station tick marks are twice the length of the minor station tick mark.

TABLE 2-1.3A (cont'd)

Profile Sheets:

Select scales appropriate for the project. The following example scales may be appropriate for the condition shown:

1. Rural Sections in hilly or mountainous terrain- 1:100 vertical, 1:1000 horizontal
2. Rural or urban with gentle rolling terrain- 1:50 vertical, 1:500 horizontal
3. Rural or urban with level terrain- 1:20 vertical, 1:200 horizontal

Contour Intervals: Scale	Index Contours	Intermediate Contours
1:200	1 m	0.25 m
1:500	2 m	0.5 m
1:1000	5 m	1 m
1:2000	10 m	2 m
1:5000	25 m	5 m

Stationing and Kilometer Post System (Formerly Post Miles)

Instead of the 100 foot stationing, we will be using 100 meter (328.08') per station. This means a station value will look something like 2+80.374. Because 100 meters is such a large distance, minor station tick marks will be at 20 meter intervals with annotation at full 100 meter stations. The first number in the station is in 100 meter intervals, the next two digits are in meters, and the last three digits are millimeters. The reason we need to measure stationing to the millimeter is to retain the current degree of accuracy (for example 3 mm = 0.01 foot).

Return to Section 2 Table of Contents, Main Table of Contents, page 1-2, page 2-1, page 2-23, page 2-71, page 2-73, page 2-97, page 2-231

Station pluses to reference construction features should be shown to 0.1 m, except for those situations where greater accuracy is required.

The Post Mile System (PM) will be soft converted to the Kilometer Post System (KP) by applying the 1.6093 factor to the existing reference system. All equations and prefixes will be retained. Until the conversion of the existing databases is complete both the PM and KP designations shall be used on project plan title sheets, special provisions and contracts. However, only the KP designation shall be shown in the Dist.-Co.-Rte.-KP area of the project identification block at the top of the project plan sheets.

Paper Sizes

The Department will adopt the ISO "A" series of paper sizes, however **we will continue to use English sized paper until the paper manufacturers begin producing the metric paper.**

The ISO "A" series sizes are the preferred international paper sizes. There are five "A" series sizes:

A0	1189 x 841 mm (46.8 x 33.1 inches)
A1	841 x 594 mm (33.1 x 23.4 inches)
A2	594 x 420 mm (23.4 x 16.5 inches)
A3	420 x 297 mm (16.5 x 11.7 inches)
A4	297 x 210 mm (11.7 x 8.3 inches)

A0 is the base drawing size with an area of one square meter. Smaller sizes are obtained by halving the long dimension of the previous size. All "A" sizes have a height to width ratio of one to the square root of 2.

Caltrans will continue to use the established 559 mm x 864 mm (22" x 34") trim line dimensions printed on 609 mm x 914 mm (24" x 36") paper. The established image areas will remain the same until the Department switches to the "A" series paper. At that time the image area will be adjusted to fit the new paper. There will no longer be a need to have trim line dimensions to obtain a full 50% reduction.

Units & Symbols

Metric units (SI) and prefixes used with the metric units are included in Metric Standard Plan A10A.

The symbols for metric units shown on Metric Standard Plan A10A are to be used for metric project plan preparation.

Substitute Symbols - Certain computer programs or other data processing devices do not allow for the use of superscripts and other Standard nomenclature. Caltrans has adopted the following substitutions for these instances. These were taken from the International Standard Organization (ISO) publication ISO-2995-1974 and are recognized as International standards.

UNIT OF MEASURE

ASTM E380 Symbol	Caltrans Substitute	Unit
m	M	meter
m^2	M2	square meter
m^3	M3	cubic meter
km	KM	kilometer
kg	KG	kilogram
ha	HA	hectare
h	H	hour

The Caltrans substitute symbols are only to be used where the proper lower case script and superscripts are not available.

Pay Items - The Basic Engineering Estimating System (BEES) has field limitations and will not accept superscripts or subscripts for units of measure. Substitute symbols for pay items in the BEES are included in Table 2-1.3C. However, the standard nomenclature should be used in all other applications including the project plans and specifications.

Earthwork - Computation of earthwork quantities will continue to be based on an average end area method. In the metric system, this computation will involve multiplying an average end area in square meters times the distance in meters between cross-sections (usually 20 meters). This, of course, results in cubic meters. The electronic planimeters currently in use are easily changed from English units to metric units by the push of a button.

Return to Section 2 Table of Contents, Main Table of Contents, page 2-1, page 2-71, page 2-97, page 2-231

TABLE 2-1.3C

CALTRANS BEES SUBSTITUTE SYMBOLS FOR PAY ITEMS INCLUDED IN ENGINEER'S ESTIMATE

Imperial Symbol	Metric Symbol	Metric Unit
LF	M	meter
SQFT	M2	square meter
EA	EA	each
SQYD	M2	square meter
CY	M3	cubic meter
LNMI	LNKM	lane kilometer
TON	TONN	tonne (1000 kg)
CF	M3	cubic meters
LS	LS	lump sum
ACRE	HA	hectare
STA	STA	station (100 m)
MI	KM	kilometers
LB(S)	KG	kilograms
TAB	TAB	tablet
GAL	L	liters
MFBM	M3	cubic meters
HR	H	hours

2-1.4 Project Plan Submittals

The project plans portion of the PS&E Submittal sent to Division of Engineering Services, Office of Office Engineer (DES-OE) are to consist of CADD-generated plan sheets submitted electronically using a PS&E CADD Submittal Form (see Figure 2-7) and data transferred over the network. Include a Project Plan Review Checklist (see Figure 2-8). Fill in all the information on the forms. The forms information must be complete and accurate for the project to be processed in a timely manner. All electronic files must meet the requirements stated in the PS&E Directory Checklist on the PS&E CADD Submittal Form and the Project Plan Review Checklist.

Legacy plan sheets, such as existing Log of Test Boring and As-Built data of existing structure/roadway plans, which are not available as electronic files, may be scanned into raster (Tiff) format and submitted as (Tiff) files for purposes of establishing a 100% electronic PS&E Submittal. See Section 2-1.5 of this manual regarding criteria for submittal of (Tiff) files.

Prints of the electronically transmitted CADD files are not required as part of the PS&E submittal sent to DES-OE.

Office of Structures Design shall submit their portion of the project plans to DES-OE using the above-specified procedures. Structure plans prepared by local agencies or consultants shall be sent to Office of Structures Design for final processing.

Return to Section 2 Table of Contents, Main Table of Contents, page 2-1, page 2-71, page 2-97, page 2-231

FIGURE 2-7

PS&E CADD SUBMITTAL FORM

(This Form Should Be Filled Out By The Qualified CADD Contact Person)

STATE OF CALIFORNIA - DEPARTMENT OF TRANSPORTATION

PS&E CADD SUBMITTAL

DES-OE -0021 (Rev 03/28/01)

Date _____

This is a - - ○ Original ○ Revise/Replace ○ Additional ○ Addenda

Check Two

☐ District ☐ Structures

☐ Imperial ☐ Metric

Dist.SourceEA	District/County/Route		
Post Mile or Kilometer. Post			
District Project Engineer	Phone Number	Project Manager	Phone
District Structures CADD Contact Person		Delineator E-Mail Address	Calnet/Fax

PROJECT IDENTIFICATION

Node ID / Address / File Name		
Directory Size (Blocks/Bytes)	Total No. Files	Total CADD Sheets

PS&E DIRECTORY CHECKLIST

- ☐ Place Proper Signature
- ☐ Place Registration Seal Information
- ☐ Follow Leveling Convention (As Per Manual)
- ☐ Follow Electronic File Naming Convention
- ☐ Remove Extraneous Information
- ☐ Place All Files In PS&E Directory
- ☐ Display Correct Levels In Design Files
- ☐ Check For Current Time/Date Stamp
- ☐ Final Check Print Created On Current Plotting System
- ☐ Establish Plot View For All Design Files
- ☐ File Design
- ☐ Delete Unused Named Views
- ☐ Directory / File Protection For DES-OE Access
- ☐ Plot Files Rotated 0 or 90 Degrees
- ☐ Plot Files Generated From Fenced Cut - lines
- ☐ Display Properly
- ☐ Specially Added Files (list)

.....

.....

.....

.....

.....

.....

[ ] DES -OE Engineer's Revised Submittal Approval

(Initials)
DES -OE

Special Instructions:

.....

.....

.....

.....

.....

.....

.....

For DES-OE Project Plans Use Only

To: _____

_____ Date In _____ Date out

Package Received: _____

Received by: _____

Return to Section 2 Table of Contents, page 2-24

FIGURE 2-8

PROJECT PLAN REVIEW CHECKLIST
(For District or Structures Use)

Project Plan Review Check List

(For District Or Structures Use)

THIS CHECKLIST SHALL BE COMPLETED BY THE DESIGNATED PROJECT REVIEWER ONLY -PLEASE PRINT CLEARLY

DIST/STRUCTURES ☐ District ☐ Structures **IMPERIAL/METRIC** ☐ Imperial ☐ Metric

PROJECT I.D. _____ **Dist/SourceEA**_____

DIST. / COUNTY (S) / RTE (S) / PM

DATE REVIEWED _____ **PROJ ENGR**_____ **PHONE** _____

DRAFT REVIEWER _____ **DIST O.E.**_____ **PHONE** _____

IS THIS A CONSULTANT JOB ☐ Yes ☐ No

TOTAL SHEETS_____

PROJECT REVIEW CHECK RECOMMENDS...

- ☐ SEND PLANS TO DES-OE WITH PS & E PACKAGE
- ☐ RETURN PLANS TO PROJ ENGR FOR ADDITIONAL CHANGES

TITLE SHEETS

- ☐ Seal / Signatures
- ☐ Design Oversight Approval for Consultant Projects- Lower Left (Printed Name, Signature, Registration No., Date of Signature) and PS&E Note
- ☐ North Arrow / Bar Scale or No Scale
- ☐ Correct Contractor's Note (lower left)
- ☐ County(ies) Where Project Located Shown on Location Map (Outlined / Crosshatched)
- ☐ Project Description In Accordance With Section 2-2.1 (B) Of The Plans Preparation Manual
- ☐ Leave Sheet Index Blank
- ☐ Check All Lettering
- ☐ All Features In Project Title Must Be Identified On Strip Map
- ☐ Project E.A. In Lower Rt. Border
- ☐ Dist. / Co. and Disclaimer Note
- ☐ Show Destinations W / Arrow On Strip Map
- ☐ Show City or County Limits
- ☐ Show City Names Of Incorporated / Unincorporated Areas (caps / upper/lower respectively)
- ☐ Bridges Shown By Symbol, Also Show Bridge Name, Type (O.C. or U. C.) and Number if Structure Plans Are Included
- ☐ Label Waterways/Railroads and All Relevant St Names
- ☐ Identify All Signed Routes On Strip Map (use no shields)
- ☐ Show Construction Limits Or Location Of Construction Including Stationing and K.P.'s

PLAN SHEETS

- ☐ Seal & Signature
- ☐ North Arrow (use appropriate size)
- ☐ Scale (if applicable)
- ☐ Proper Sheet Identification in Lower Rt. Comer Including The Correct Sheet Identification Code / Plan Number
- ☐ Use Standard Line Symbology (dropout where applicable)
- ☐ Lettering Or Text (dropout where applicable)
- ☐ Drainage / Profile Grids (should be in dropout)
- ☐ Check Details For Reduction Suitability
- ☐ Other .....

IMPORTANT

- ☐ Plot Verification _____ initial
- ☐ Electronic Date / Time Stamp Indicated on plans

COMMENTS:

Revised 03/28/01

Return to Section 2 Table of Contents, page 2-24

2-1.5 Project Plan File Formats

Standard File Format

The standard file format for submission of PS&E to Division of Engineering Services, Office of Office Engineer (DES-OE), is a MicroStation ***design File***… or ***.dgn***

The following variations will also be acceptable for PS&E Submittal, under specific circumstances as listed below:

- ***(dgn)*** format files with imbedded or imported ***raster*** data. Pictures imported into the design plane for the purpose of enhancing or emphasizing a detail. This is static data and cannot be altered. Examples are Fire Marshal Seals, existing landmarks, etc.
- ***(Tiff)*** or ***Tagged Information Format File.*** Acceptable where legacy plan sheets are being considered for submission as part of a new CADD Submittal. This is a single, complete plan sheet with borders intact, submitted as a tiff raster image. The legacy sheet is to be scanned, sized (cropped), de-speckled and de-skewed before submittal. The preferred size of the finished Tiff plot is 559 mm x 864 mm (22” x 34”) and for special circumstances the maximum allowable size is 584 mm x 889 mm (23” x 35”). These will be raster edited.

Non-Acceptable Formats

The following CADD file formats will not be acceptable for PS&E due to the time and effort required to process at DES-OE Project Plans.

- ***(Reference Files)*** MicroStation ***dgn*** files containing reference file data. That is any sheet file that requires one or more external files that contain sheet geometry for use as an overlay.
- ***(Hybrid or Composite Files)*** MicroStation ***dgn*** files with attached Descartes ***HMR*** (a specific proprietary image format developed by HMR corporation) images. These are raster images converted to the neutral ***HMR*** format and referenced to the design plane.
- ***(Raster Reference)*** Any raster format file (jpg, gif, tiff, cgm) that is attached to the design plane using MicroStations reference attachment tools.
- ***(Cadd Generated Raster)*** Any file that was created as a ***dgn*** file, but converted to raster for convenience or expediency, will not be accepted for PS&E Submittal. This includes sheet files from projects previously completed in CADD, but have been moved to archival tape or disk. Recover and use the original CADD files.
- ***(AutoCad Files)*** Any file started with AutoCad (.dwg or .dxf file) must be imported into a MicroStation file.

2-1.6 Use of Standard Plans

Caltrans Standard Plans are approved standardized details that are frequently applicable to the construction of highway facilities. The Standard Plans are divided into five major sections: (1) General Road Work, (2) Bridge Related Work, (3) Roadside Signs, (4) Overhead Signs, and (5) Signals, Lighting and Electrical Systems. All engineers and detailers should have a copy of the current Standard Plans book and be familiar with its contents.

The Standard Plans book is updated and issued at regular intervals, usually at 3-5 year intervals by the Office of Office Engineer. The Office of Office Engineer issues new or revised Standard Plan sheets when the need arises. Revised Standard Plans (RSPs) replace the comparable sheets in the current edition of the book. New Standard Plans (NSPs) supplement the current edition of the book.

The Standard Plans List plan sheets are no longer included as part of the project plans to identify the Standard Plans applicable to a project. The Standard Plans applicable to a specific project are now indicated by the use of the “Standard Plans List” Standard Special Provision which is included in the project’s special provisions. The “Standard Plans List” Standard Special Provision is updated in conjunction with the issuance of New or Revised

Return to Section 2 Table of Contents, page 2-24, page 2-30

Standard Plans. Where Revised or New Standard Plans are applicable to a project so indicate on the "Standard Plans List" Standard Special Provision. Office of Office Engineer will insert the indicated applicable Revised or New Standard Plans as project plan sheets into the project plan set.

The Design Section responsible for the project is to verify that the applicable Standard Plans, Revised Standard Plans and New Standard Plans are identified on the current "Standard Plans List" Standard Special Provision sent to the Office of Office Engineer as part of the PS&E Submittal.

Caltrans Standard Plans are available via the Caltrans DES-OE Internet Web Site. Caltrans personnel may also access the Standard Plans via the Caltrans Internal Network. The Standard Plan detail files contain no signature or registration seal information. These files are provided to assist project designers where a Standard Plan detail does not fit a given situation and must be modified. The individual modified detail or details from the Standard Plan, not the entire Standard Plan detail sheet, are to be included in the project plans. Such modified details shall be shown on the applicable detail sheet of the project plan (for example: construction details, drainage details, etc.).

Return to Section 2 Table of Contents

2-2 PROJECT PLAN SHEET SPECIFIC DATA AND EXAMPLES

The example plan sheets contained in this Section 2-2 were obtained from several different sources. The examples were randomly selected from multiple projects and may not necessarily reflect desirable designs nor current design standards. The examples are presented in the reduced 279 mm x 432 mm (11" x 17") format size. Explanatory notes on the preparation of plan sheets are included and in most instances are outlined. The project plans in these reduced formats are used by prospective bidders to prepare bids, by successful bidders to construct projects and by engineers to inspect the work.

2-2.1 Title Sheets

The first sheet of the project plan set is the Title Sheet. A Title Sheet is to be prepared on all projects for which a PS&E Submittal is required. The Title sheet format available in the Caltrans CADD Cell Library shall be used.

Each Title Sheet for State highway projects shall be prepared by the District, except those projects consisting entirely of bridge, building, or other transportation related structures work (no road plans or small number of road plans). These Title Sheets shall be prepared by the responsible unit in the Office of Structures Design. The Title Sheet should be a neat, clear, and concise presentation of the project. The appearance and accuracy of the title sheet serves as an indication of the quality of work done by the Department. Compared to other sheets of the plans, it is distributed widely. It is sometimes used for press releases, public hearings, by map makers in updating their maps, and by out of state contractors to locate the work.

The finished Title Sheet includes a strip map of the project, a small-scale State map (location map on the sheet format), an index of the plan sheets inserted by DES-OE, the signature and registration seal of the person in responsible charge for preparation of the entire project, the project description, the limits of construction and work, mandatory material or disposal sites (if any), graphic scale (if applicable), contract number, and project identification block information.

The information on the title sheet shall be limited to that identified in the previous paragraph. Features such as typical cross sections, construction details, drainage details, construction area signs, and quantity summaries shall not be shown on the Title Sheet. The type of work should not be identified by either symbol or labeling.

Layouts as described in Section 2-2.4 (1) shall not be used as a strip map on the Title Sheet.

Under no circumstances shall more than one sheet be used to present necessary title sheet information for any one project. The project location shall be indicated on the location map as shown on the sheet entitled “Title Sheet Location Map Examples, Figures 2-9 and 2-10”, in this Section 2-2.1.

The strip map should be to a convenient scale which best fits the size of the title sheet.

Route Adoption maps, Freeway Agreement maps, Title Sheets for prior projects, USGS quadrangle maps, and the Department’s Road System (County Road) maps are good sources for the information required as the base for the strip maps. Do not use AAA Maps or Thomas Brothers Guide Mapping because of copyright laws. District kilometer post (post mile) maps are unsuitable and shall not be used.

In those cases where a project may be constructed in several stages, or where a number of adjacent projects will be constructed, consideration should be given to preparation of an overall strip map. This strip map, or portions thereof, could be used for all projects and adjusted to the scale desired for each project.

The strip map should show city limits, county lines, state and international boundaries, existing streets, public roads and highways, railroads, canals, lakes, dams, bridges, parks, and prominent geographic features. In rural areas, township, range and section lines may also be shown. In some instances, it may also be appropriate to show recorded Spanish land grants. Special topographical features such as transmission lines and aqueducts, should be shown. Major improvements such as courthouses, post offices, hospitals, schools, large industrial sites, and other private facilities should

Return to Section 2 Table of Contents, page 2-17

be shown only when they have a direct effect on the project and will be referred to in the Project's Special Provisions. Highways of major importance should show destinations at map edges. All features shall be labeled with their official titles.

Names of roads or other features referred to in the project title, the Project's Special Provisions, and other contract-related documents shall be shown on the Title Sheet.

The proposed construction should be shown in heavy solid lines. One solid line for each roadway, ramp, crossroad, frontage road, etc. should be used and normally should reflect the status of the area upon completion of the project.

The main line shall be stationed at intervals of 50, 20, or 10 stations depending upon the scale. All numerically different station equations (but not numerically identical line equations) and kilometer post equations with a numerical difference of 0.1 km or more within the limits of construction shall be shown. Kilometer post and station equations at the intersection of route centerlines shall also be shown. Kilometer post equations, reflecting a change in prefix only, need not be shown.

Project limits of construction and work to be shown on the Title Sheet shall conform to the instructions in Section 2-2.1(C).

The project description for the Title Sheet shall be prepared as provided in Section 2-2.1(B).

Title Sheets shall be oriented so that stationing progresses from left to right. On projects where stationing is in the opposite direction from kilometer post, the project title, beginning and end of construction, and beginning and end of work shall be in order of kilometer posts; however, the Title Sheet shall be drawn with stationing increasing from left to right.

All bridges shall be shown by symbol and identified by name and type (overcrossing, undercrossing, etc.). The bridge number shall be shown on all structures for which bridge plans are to be included and on which Office of Structures Design work is to be done. On complex freeway to freeway interchange projects with multiple structures, the structures can be denoted on the strip map by a numerical reference. The structures are listed on the Title Sheet by the corresponding numerical reference showing structure names and bridge numbers.

Mandatory material sites and mandatory disposal sites shall be shown on the Title Sheet. Optional material or disposal sites should not be shown on the Title Sheet.

For proper orientation, a standard north arrow shall be shown. The District shall not complete the index of sheets on the Title Sheet. Following receipt of the Title Sheet in DES-OE and prior to advertisement, the index of sheets will be added. Information pertaining to the applicable standard plans must be included in the PS&E Submittal as part of the project's special provisions. (See Section 2- 1.6).

Before submission, the Title Sheet shall be signed as provided in Figure 2-3 of Section 2-1.2(B).

The project description information should be included on the Title sheet before the sheet is transmitted electronically to DES-OE. The review process by DES-OE will include finalizing the project description.

Title Sheets for city or county projects involving federal funding are usually prepared by the respective city or county and shall conform to the requirements outlined in this manual.

Return to Section 2 Table of Contents, page 2-17

2-2.1(A) Title Sheet Header

The Title Sheet header precedes the project description on the Title Sheet. The header begins with the phrase "PROJECT PLANS FOR" and continues with a descriptor indicating the type of facility involved and whether construction, highway planting, building construction, etc. is to be performed.

The most common descriptors:

- CONSTRUCTION ON STATE HIGHWAY
- HIGHWAY PLANTING ON STATE HIGHWAY
- BUILDING CONSTRUCTION ON STATE HIGHWAY
- BUILDING CONSTRUCTION
- CONSTRUCTION ADJACENT TO STATE HIGHWAY
- CONSTRUCTION ON AND ADJACENT TO STATE HIGHWAY

Additional descriptors are:

- CLEANING AND PAINTING BRIDGE ON STATE HIGHWAY
- CLEANING AND PAINTING SIGN STRUCTURE ON STATE HIGHWAY
- ESTABLISH EXISTING PLANTING ON STATE HIGHWAY
- CONSTRUCTION ON CITY STREET
- CONSTRUCTION ON COUNTY ROAD
- CONSTRUCTION ON COUNTY HIGHWAY
- CONSTRUCTION

DES-OE should be consulted when a project requires a descriptor not shown above.

2-2.1(B) Project Descriptions

The project description on the Title Sheet shall contain:

(1) COUNTY OR COUNTIES THE PROJECT IS LOCATED IN

List the county or counties where the project is located as the first part of the project description (example: "IN SHASTA COUNTY"). If the project is in two or more counties list all counties involved (example: "IN SANTA CLARA AND SANTA CRUZ COUNTIES

(2) CITY OR TOWN THE PROJECT IS LOCATED IN

List the city or town where the project is located as the next part of the project description, except as described in subsection (2)(g) on the following page.

(a) If the project is entirely within the city limits of an incorporated city, use the term "in" (example: "IN OAKLAND").

(b) If the project is both inside and outside the city limits of an incorporated city, use the phrase "in and near" (example: "IN AND NEAR OAKLAND").

(c) When the project is at an unincorporated town, use the term "at" not "in" (example: "AT KRAMER").

(d) If the project is not within a town or city, make reference to the nearest city or town shown on the current State highway or county road map and which is on the route where construction is to take place. Use the term "near" (example: "NEAR GILROY").

Return to Section 2 Table of Contents, page 2-30

(e) If the project location is more than 8 km from a city or town, the reference for example could be “ABOUT 12 km WEST OF TURLOCK”.

(f) When referring to a city, do not use the phrase “the city of” except for special circumstances (example: “IN THE CITY AND COUNTY OF SAN FRANCISCO”).

(g) Omit city or town names from the project title description:

If the project consists of three or more locations on the same route and the construction locations cover a lengthy section of highway (greater than 10 km), or

If the project consists of three or more locations spread over two or more routes or two or more counties.

(3) PROJECT CONSTRUCTION IS ON ONE ROUTE

Where the project is only on one route, the route designation is not listed in the project description and the following applies.

(a) If the project is on one route with a continuous length of construction which is 0.3 km or greater, describe the beginning and end points of construction or highway planting by using the “From...To...” format.

Example:

**IN LOS ANGELES COUNTY
NEAR NEWHALL FROM 0.1 km SOUTH OF
WELDON CANYON OVERCROSSING TO 0.3 km NORTH
OF CALGROVE BOULEVARD UNDERCROSSING**

The beginning and end points of construction or highway planting shall identify the limits of the majority of work to be performed. Distance references to beginning and end points of construction or highway planting shall be stated in increments of 0.1 km. The beginning and end points of construction or highway planting should not include work of an incidental or minor nature such as advance construction area signing. See Section 2-2.1(C) of this manual.

The beginning point of construction or highway planting and the end point of construction or highway planting shall be referenced to the nearest existing identifiable point such as, a road, street, or bridge. State and county lines are also acceptable since they are posted on the ground. Since city limits may change, a specific tie to a city limit should not be used. “California State Highway Log” and “California Bridge Log” books should be used in identifying kilometer post of reference points used in the project description.

(b) If the project consists of two locations on one route (with individual lengths of construction greater than 0.3 km), describe beginning and end points of construction or highway planting for each location using the “From... To...” format. The distance between the end point of construction of the first location and the begin point of construction of the second location is to be greater than 0.3 km when using this type of project description, otherwise use (a) above.

Example:

**IN LOS ANGELES COUNTY
NEAR NEWHALL FROM 0.1 km SOUTH TO 0.3 km NORTH OF
WELDON CANYON OVERCROSSING AND FROM 0.4 km SOUTH
TO 0.3 km NORTH OF CALGROVE BOULEVARD UNDERCROSSING**

(c) If the project consists of two locations on one route with one construction location greater than 0.3 km and one construction location less than 0.3 km, describe beginning and end points of construction or highway planting for the location greater than 0.3 km in length by using the "From... To..." format, describe the location less than 0.3 km in length by using a spot location description "At…"

Example:

IN LOS ANGELES COUNTY
NEAR NEWHALL FROM 0.1 km SOUTH TO 0.3 km NORTH
OF WELDON CANYON OVERCROSSING AND
AT CALGROVE BOULEVARD UNDERCROSSING

(d) If the project consists of two locations on one route (with individual lengths of construction less than 0.3 km), describe the locations by using two spot location descriptions "At … and At…"

Example:

IN FRESNO COUNTY
IN FRESNO AT BIOLA JUNCTION OVERHEAD
AND AT HERNDON CANAL BRIDGE

(e) If the project consists of one location on one route (length of construction less than 0.3 km), a point description is appropriate.

Example:

IN MENDOCINO COUNTY
NEAR MENDOCINO
AT BIG RIVER BRIDGE

(f) If the project consists of one or more locations within 0.6 km of the center of a route separation (measured radially), use a spot location description.

Example:

IN LOS ANGELES COUNTY
IN LOS ANGELES AT ROUTE 5/118 SEPARATION

(g) If the project consists of three or more locations on the same route, describe the beginning of the first location as the beginning point of construction or highway planting and the end of the last location as the end point of construction or highway planting. The phrase "AT VARIOUS LOCATIONS" shall be used prior to describing the beginning and end points of construction or highway planting.

Example:

IN LOS ANGELES COUNTY NEAR NEWHALL
AT VARIOUS LOCATIONS FROM 0.1 km SOUTH OF
WELDON CANYON OVERCROSSING TO 0.3 km NORTH
OF CALGROVE CANYON BOULEVARD UNDERCROSSING

Return to Section 2 Table of Contents

(h) If the project consists of three or more locations on the same route and the project locations cover a lengthy section of highway (greater than 10 km), describe the beginning of the first location as the beginning point of construction or highway planting and the end of the last location as the end point of construction or highway planting. Omit city or town names from the title description. The phrase "AT VARIOUS LOCATIONS" shall be used prior to describing the beginning and end point of construction or highway planting.

Example:

IN IMPERIAL COUNTY
AT VARIOUS LOCATIONS FROM ROUTE 8/11 SEPARATION
TO 0.6 km EAST OF 4TH AVENUE OVERCROSSING

(4) PROJECT CONSTRUCTION IS ON TWO ROUTES

Where the project is on two routes, the route designations are listed in the project description and the following applies.

(a) If the individual length of construction on each of the two routes is 0.3 km or greater, indicate the corresponding route designation before the beginning and end points of construction or highway planting for each of the two locations.

Example:

IN SAN DIEGO COUNTY IN EL CAJON
ON ROUTE 8 FROM 0.3 km WEST OF MOLLISON
AVENUE UNDERCROSSING TO MOLLISON AVENUE
UNDERCROSSING AND ON ROUTE 67 FROM 0.2 km
TO 0.5 km NORTH OF ROUTE 67/8 SEPARATION

(b) If the length of construction on one route is 0.3 km or greater and the length of construction on the other route is less than 0.3 km, indicate the corresponding route designation before describing the beginning and end points of construction or highway planting for the location greater than 0.3 km in length by using the "From... To..." format and indicate the corresponding route designation before describing the location less than 0.3 km in length by using a spot location description "At…"

Example:

IN SAN DIEGO COUNTY IN EL CAJON
ON ROUTE 8 FROM 0.3 km WEST OF MOLLISON AVENUE
UNDERCROSSING TO MOLLISON AVENUE UNDERCROSSING
AND ON ROUTE 67 AT BROADWAY UNDERCROSSING

(c) If the individual length of construction on each of the two routes is less than 0.3 km, indicate the corresponding route designation before each of the two spot locations

Example:

IN SAN DIEGO COUNTY IN EL CAJON
ON ROUTE 8 AT MOLLISON AVENUE UNDERCROSSING
AND ON ROUTE 67 AT BROADWAY UNDERCROSSING

Return to Section 2 Table of Contents

(5) PROJECT CONSTRUCTION IS ON THREE OR MORE ROUTES

Where the project is on three or more routes, the route designations are not listed in the project description and the following applies.

(a) If the project consists of three or more locations spread over two or more routes or two or more counties, use the phrase "AT VARIOUS LOCATIONS" for the project limits description following the reference to the counties. Omit city or town names from the title description.

Example:

IN SANTA CLARA AND SANTA CRUZ COUNTIES
AT VARIOUS LOCATIONS

(6) PROJECT DESCRIPTION ADDITIONAL INSTRUCTIONS

(a) Except for the use of the "km" symbol for kilometer, do not use abbreviations in the project description.

(b) When referring to an identifiable point, use the full name descriptions (Santa Ana River Bridge, Normandie Avenue Overcrossing, etc.).

(c) Punctuation marks are used only when listing 3 or more counties or cities are in the project description.

(d) Do not use "Interchange" in the project description (example: Use Route 710/405 Separation, not Route 710/405 Interchange). Do not use "Junction" to describe the intersection of highways, except in those rare instances where a break in the route creates two separate intersections of a highway with another highway. In these instances, the intersection points may be described. (example: North Junction Route 79, etc.).

(e) Use Bridge number only if there may be some confusion as to which structure is referred to (example: bridges crossing the same waterway with the same name but different numbers).

(f) Names such as, a road, street, or bridge used in the project title should also appear on the title sheet strip map.

(g) Do not use freeway names, such as, "Golden State Freeway", in the project description.

Return to Section 2 Table of Contents

2-2.1(C) Project Limits of Construction and Work

Project limits of construction and work to be shown on the Title Sheet shall conform to the following:

Except for building construction projects, and projects on 3 or more routes, or a spot location, the beginning and end of construction and work shall be shown on the Title Sheet.

Begin construction and end construction as shown on the Title Sheet shall identify the limits of the majority of work to be performed on the route. Except for the types of projects specified herein, begin and end construction shall be referenced by kilometer post, post mile, and station. Where certain types of projects (resurfacing, seal coat, etc.) do not require stationing to be shown to identify the limits of construction, begin and end of construction are to be shown by kilometer post and post mile only.

Begin work and end work as shown on the Title Sheet shall encompass all work to be performed on the route. Except for the types of projects specified herein, begin and end work shall be referenced by station limits. Where certain types of projects (resurfacing, seal coat, etc.) do not require stationing to be shown to identify the limits of construction or work, begin and end of work are to be shown by kilometer post only. Do not use verbiage such as "300 meters beyond End of Construction" to define work limits on the above-referenced project types. In most instances, the beginning and end points of work will extend beyond the beginning and end points of construction to show work of an incidental or minor nature such as advance construction area signing (i.e. the first "ROAD CONSTRUCTION AHEAD" sign). See Title Sheet - Example 'B'. The work involved in the installation of construction area signs at intersecting cross roads or on streets adjacent to the route on which construction is to be performed shall not be reflected in the described project limits of construction or work. Construction area signs shall not be shown on the Title Sheet. If construction is to be performed on intersecting or adjacent cross roads or streets adjacent to the route on which construction is to be performed, the limits of this work on the cross roads or streets shall be identified as shown on Title Sheet - Example 'B'.

The project description on the Title Sheet shall describe the beginning and end points of construction. The beginning and end points of construction shall be shown in increments of 0.1 km. The kilometer post (KP) values shown in the upper right corner of the Title Sheet shall be the beginning and end points of construction (see Title Sheet - Example 'B'). Only KP values shall be shown in the upper right corner of the Title Sheet.

Where construction on a route is to be performed in adjacent project segments, the limits of construction and associated project descriptions for the adjacent projects should not overlap. To minimize description overlaps, work of an incidental or very minor nature (in addition to advance construction area signing) (for example: temporary route connection) may be included within the identified limits of work instead of the identified limits of construction.

Occasionally, the beginning points of work and construction and the end points of work and construction may be identical where work of an incidental or minor nature is not to be performed outside the limits of construction. Where the beginning points of work and construction and the end points of work and construction are identical, such beginning and end points shall be shown on the Title Sheet as "BEGIN WORK AND CONSTRUCTION" and as "END WORK AND CONSTRUCTION." On projects with identical work and construction limits, the beginning and end points shall be referenced by kilometer post, post mile, and stationing.

Both beginning and end points of construction shall be shown whenever there is a distance of 0.3 km or more between such points. If the construction to be performed is at a spot location (less than 0.3 km), a single kilometer post value shall be used and such construction shall be shown on the Title Sheet as "LOCATION OF CONSTRUCTION" (see Title Sheet - Example 'G').

Return to Section 2 Table of Contents, page 2-30, page 2-32, page 2-38

Title Sheets shall be oriented so that stationing progresses from left to right. On projects where stationing is in the opposite direction from kilometer posts, the project title, beginning and end of construction, and beginning and end of work shall be in order of kilometer posts; however the Title Sheet is to be drawn with stationing increasing from left to right (see Title Sheet - Example 'F').

Project limits shown on the Title Sheet for building construction projects, and projects on 3 or more routes, or a spot location shall conform to the respective Title Sheet Examples included in this Section 2-2.1.

2-2.1(D) Listing of Title Sheet Examples

Title Sheet - Example 'A' - Basic Format and Information.

Title Sheet Location Map Examples (Figures 2-9 and 2-10).

Title Sheet - Example 'B' - Construction on one route (continuous construction).

Title Sheet - Example 'C' - Construction on two routes (continuous construction on each route).

Title Sheet - Example 'D' - Construction at a route separation.

Title Sheet - Example 'E' - Construction one route at various locations.

Title Sheet - Example 'F' - Construction on one route (stationing in opposite direction of kilometer posts).

Title Sheet - Example 'G' - Construction on one route at spot location.

Title Sheet - Example 'H' - Construction on one route at two spot locations.

Title Sheet - Example 'I' - Construction on one route (continuous lengthy construction).

Title Sheet - Example 'J' - Construction on multiple routes in two counties at various locations.

Title Sheet - Example 'K' - Construction on one route at various locations (lengthy construction more than 50 km).

Title Sheet - Example 'L' - Construction on multiple route in multiple counties.

Title Sheet - Example 'M' - Construction on one route (Consultant Prepared Project).

Title Sheet - Example 'N' - Construction on one route in two counties.

Title Sheet - Example 'O'- Highway Planting Project.

Title Sheet - Example 'P' - Building Work (Rural adjacent to State Highway).

Title Sheet - Example 'Q' - Building Work (city or urban location off State Highway).

Return to Section 2 Table of Contents

TITLE SHEET CHECK LIST

- ☐ District, County and Route (upper right corner) TX=2.2, FT=2, WT=2, LV=10 (For Building Work Use Facility Code for Route No.)
- ☐ Kilometer Post and Sheet Number (upper right corner) TX=2.2, FT=2, WT=2, LV=10
- ☐ Location Arrow on State Map (upper right corner) AC=LOCARR, LV=10
- ☐ Standard North Arrow 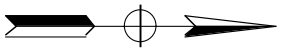 AC=NARR, LV=10
- ☐ Contract No. 00-000004 (lower right corner) TX=3.0, FT=43, WT=0, LV=10
- ☐ CU No. and EA No. (lower right corner)
- ☐ Graphic Scale or "NO SCALE"
- ☐ Destination with arrow at Strip Map Edges. Upper and Lower case lettering. (e.g., To Los Angeles ➡)
- ☐ To identify Route(s) on Strip Map (do not use route shields). Routes that work is being performed on, the following applies: TX=2.2, FT=2, WT=2, LV=10 - On Routes that no work is being performed on, the following applies: TX=1.8, FT=2, WT=1, LV=10
- ☐ Stationing and Equations (where the construction and work is identified on the layout sheets by stationing)
- ☐ City/County/State/International Boundary Limits TERO - INDIAN RESERVATION LAND BOUNDARY, ESA - ENVIRONMENTALLY SENSITIVE AREA
- ☐ Station and Kilometer Post Equation at County Lines where construction extends into another county
- ☐ Names of Incorporated Cities (ALL UPPER CASE) TX=2.5, FT=43, WT=0, Check in front of "Current" THOMAS BROS under "CITIES AND COMMUNITIES INDEX" for correct status.
- ☐ Names of Unincorporated Areas (Upper and Lower Case Lettering) TX=2.5, FT=43, WT=0, Check in front of "Current" THOMAS BROS under "CITIES AND COMMUNITIES INDEX" for correct status.
- ☐ Bridge Shown by Symbol
- ☐ Name and Type of Bridge or other Transportation related structure (e.g., Thomas St OC or UC)
- ☐ Bridge Numbers (if work is to be performed on bridge or other transportation related structure and plans prepared by Office of Structure Design are Included)
- ☐ Label Names of Waterways.
  Any Water (except Ocean & Bays) - Upper & Lower Case, TX =1.8, FT=23, WT=1.
  Bays - ALL UPPER CASE, TX =2.2, FT=23, WT=2.
  Ocean - ALL UPPER CASE, TX =3.0, FT=23, WT=2.
- ☐ Project Title Description - TX=3.7, FT=43, WT=0. **NO abbreviations allowed except <u>km</u> which must be in lower case.**
- ☐ Equation at Intersection of Route Centerlines
- ☐ Railroad (labeled). Spell out all Railways in Upper and Lower Case. TX=1.8, FT=2, WT=2.
- ☐ Mandatory Material and Disposal Sites (use of mandatory sites to be avoided where possible)
- ☐ Street Names - TX=1.8, FT=2, WT=1. Make sure street names are shown where streets cross the project or where work is being performed. Identify all geographic features that appear in the project title such as streets, creeks, bridges, etc.
- ☐ "BEGIN AND END CONSTRUCTION" (identify by kilometer post, post mile and station). TX=3.0, FT=43, WT=0, ALL UPPER CASE. See Section 2-2.1(C) for exceptions.
- ☐ Begin and End Work (identify by station). TX=2.5, FT=2, WT=2, Upper and Lower Case.
- ☐ Signature, date of signature and Registration Seal information completed, (lower right corner). Drafting Reviewers will attach SIGNATURES when project goes to PS&E.

Return to Section 2 Table of Contents

DIST	COUNTY	ROUTE	KILOMETER POST TOTAL PROJECT	SHEET NO	TOTAL SHEETS
04	SF				

INDEX OF SHEETS

LEAVE THIS AREA BLANK
(Index of sheets will be added by Division of Engineering Services - Office of Office Engineer (DES-OE)

LEAVE THIS AREA BLANK
(Federal No., if applicable, will be added by DES-OE)

STATE OF CALIFORNIA
DEPARTMENT OF TRANSPORTATION

PROJECT PLANS FOR CONSTRUCTION ON
STATE HIGHWAY

1 THIS AREA FOR PROJECT DESCRIPTION
(See Section 2-2.1(B) and 2-2.1(C) for instructions on Project Description and Project Limits)

To be supplemented by Standard Plans dated _____

The number '0' shall precede the single digit district number

Use correct county abbreviation (see Table 2-1.2)

The infomation shown on the Title Sheet for the District, County, Route and Kilometer Post is unique to each Contract No. and shall be repeated on each individual sheet of project plans. See Section 2-1.2(C)

Use this type of arrow to indicate location of project. See Figures 2-9 and 2-10 for additional information.

LOCATION MAP

The State of California or its officers or agents shall not be responsible for the accuracy or completeness of electronic copies of this plan sheet.

Caltrans now has a web site! To get to the web site, go to: http://www.dot.ca.gov

Use standard North Arrow for orientation

Caltrans Metric

THIS AREA FOR STRIP MAP
See Title Sheet - Example 'B' for additional instructions on lettering sizes.
"Stacking" may be necessary for lengthy projects (see Title Sheet - Example 'F').
Scale enlargement may be necessary for lengthy projects (see Title Sheet - Example 'I')

TEXT

CADD
FT=43, WT=0, TX=3.7 Upper Case
or
If space is limited, use... FT=43, WT=0, TX=3.0 Upper Case

1

NO SCALE
Show graphic scale or label "NO SCALE"

NOTES:

1. For Signature and Registration Seal information, see Figure 2-3 and and Section 2-1.2(B).
2. The plans approval date will be added by Division of Engineering Services - Office of Office Engineer.
3. Contract Number:
   a) The number '0' shall precede the single district number.
   b) The Contract number will always end with a '4'.
4. The Time/Date Stamp must be included on the Title Sheet and all subsequent sheets of the Project Plans.

See Note 4

See Note 1

See Note 1

Project Engineer Date
Registered Civil Engineer

REGISTERED PROFESSIONAL ENGINEER
No.
Exp.
CIVIL
STATE OF CALIFORNIA

leave blank - See Note 2

Plans Approval Date

The Contractor shall possess the Class (or Classes) of license as specified in the ''Notice to Contractors''.

TITLE SHEET, EXAMPLE "A" - BASIC FORMAT AND INFORMATION

See Note 4

See Note 3

Contract No. **04-123454**

PROJECT ENGINEER | DATE | PROJECT MANAGER | DATE

LAST REVISION 04-02-01 | DATE PLOTTED => 10-APR-2001 | TIME PLOTTED => 08:56

FOR REDUCED PLANS ORIGINAL SCALE IS IN MILLIMETERS 0 20 40 60 80

USERNAME => trmikest
DGN FILE => dpm2_039.dgn

CU 04000 | EA 123451 | Page 2-39

Return to Section 2 Table of Contents, page 2-37

Return to Section 2 Table of Contents

(Blank)

FIGURE 2-9

TITLE SHEET LOCATION MAP EXAMPLES

EXAMPLE "A"

Project located in one county. Outline county and denote county with hachure marks. Show one location arrow.

EXAMPLE"B"

Project located in one county. Outline county and show one location arrow. No hachure marks used due to limited space available.

EXAMPLE "C"

Project located in city and county of San Francisco. Show only one location arrow for this county.

Return to Section 2 Table of Contents, page 2-29, page 2-37

FIGURE 2-10

TITLE SHEET LOCATION MAP EXAMPLES

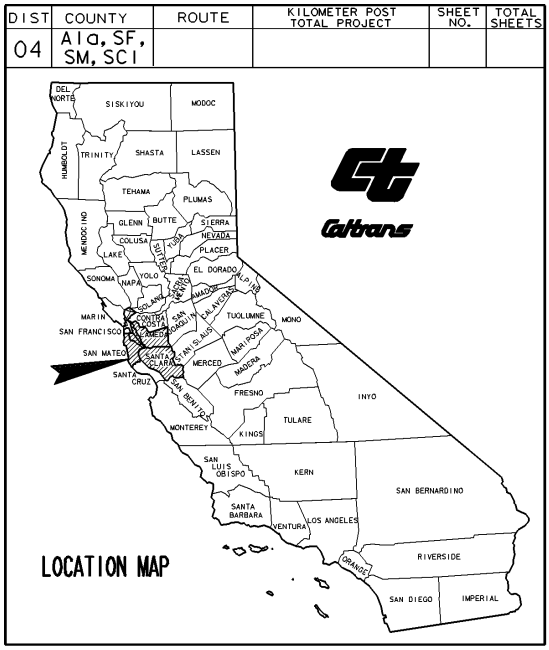

EXAMPLE "D"

Project located in multiple counties with contiguous borders. Outline each county and denote each with hachure marks. Show only one location arrow.

EXAMPLE "E"

Project located in two separate counties with no contiguous borders. Outline each county and denote each county with hachure marks. Show a location arrow for each county.

1. Except for San Francisco County as shown in Example "C" county lines shall be outlined for each county in which the project is located.
2. Use hachure marks within the county areas in which the project is located unless space is not available. See Example "B" and Example "C" for county not requiring hachure marks.
3. Hachure marks shall not extend through county names.
4. A location arrow or location arrows shall be shown. See Examples this sheet.
5. Where a project is located in a county which is split by district boundaries, the complete limits of the county shall be denoted and the district boundaries disregarded. See Example "E" Kern County split by District 09 and District 06 boundaries.
6. No other information or symbols shall be shown within the location map area.

Return to Section 2 Table of Contents, page 2-29, page 2-37

INDEX OF SHEETS

TEXT

	CADD
1	FT=43, WT=0, TX=3.0 Upper Case
2	FT=2, WT=2, TX=2.5 Upper/Lower Case
3	FT=2, WT=2, TX=2.2 Upper Case
4	FT=2, WT=1, TX=1.8 Upper/Lower Case
5	FT=2, WT=1, TX=1.8 Upper Case
6	FT=2, WT=1, TX=1.8 Upper/Lower Case
7	FT=43, WT=0, TX=2.5 Lettering for incorporated cities is all in upper case. Lettering for unincorporated areas is in both upper and lower case. Corporate status of cities is found in the manual entitled, "Place Names in California''.
8	FT=43, WT=0, TX=3.7 Upper Case
9	FT=43, WT=0, TX=3.0 If letters are to be used, they must be all Upper Case

STATE OF CALIFORNIA

DEPARTMENT OF TRANSPORTATION

PROJECT PLANS FOR CONSTRUCTION ON

STATE HIGHWAY

Spacing between lines is no greater than letter height

(8) IN LOS ANGELES COUNTY

NEAR NEWHALL

FROM 0.1 km SOUTH OF WELDON CANYON OVERCROSSING

TO 0.3 km NORTH OF CALGROVE BOULEVARD UNDERCROSSING

To be supplemented by Standard Plans dated _____

(3) DIST	COUNTY	ROUTE	KILOMETER POST TOTAL PROJECT	SHEET NO	TOTAL SHEETS
07	LA	5	R74.9/R79.3		

The State of California or its officers or agents shall not be responsible for the accuracy or completeness of electronic copies of this plan sheet.

Caltrans now has a web site! To get to the web site, go to: http://www.dot.ca.gov

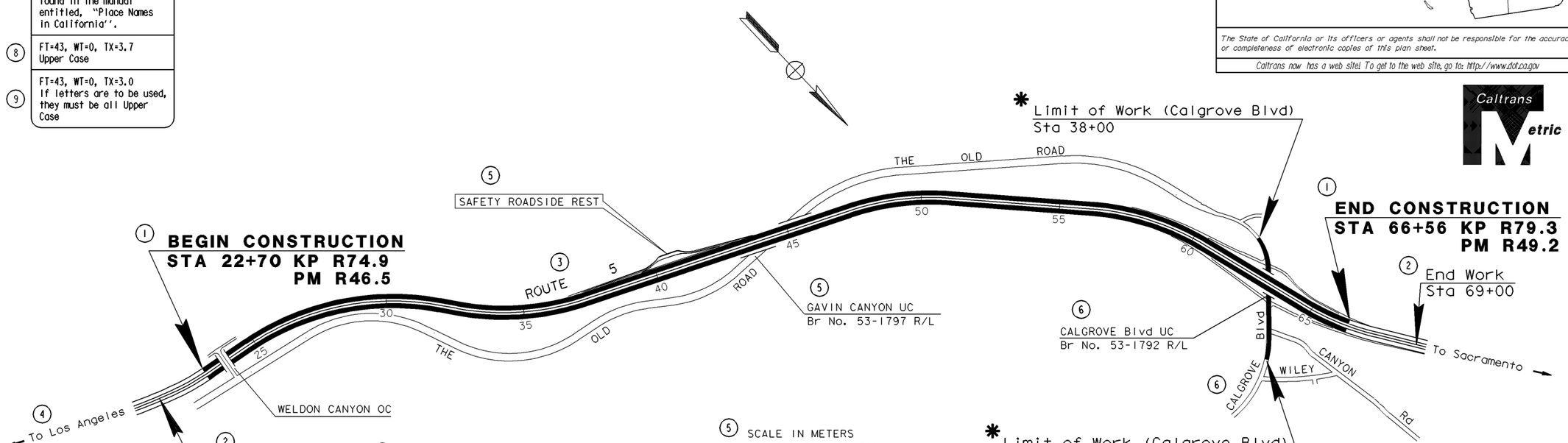

Begin and end work to encompass all work to be performed including work of an incidental or minor nature such as advance construction area signing.

* Construction on intersecting or adjacent cross roads or streets along the route shall be identified as shown.

Identified limits of work should encompass all work to be performed on the intersecting or adjacent cross roads or street.

The text sizes to use for this is: FT=2, WT=2, TX=2.5 Upper and Lower Case

Project Engineer Date
Registered Civil Engineer

Plans Approval Date

REGISTERED PROFESSIONAL ENGINEER No. Exp. CIVIL STATE OF CALIFORNIA

The Contractor shall possess the Class (or Classes) of license as specified in the ''Notice to Contractors''.

TITLE SHEET, EXAMPLE "B" - CONSTRUCTION ON ONE ROUTE

(one continuous length of construction which is 0.3 km or greater)

(9) Contract No. 07-001564

PROJECT ENGINEER | DATE | PROJECT MANAGER | DATE

LAST REVISION 04-03-01 | DATE PLOTTED => 10-APR-2001 TIME PLOTTED => 08:56

FOR REDUCED PLANS ORIGINAL SCALE IS IN MILLIMETERS 0 20 40 60 80

USERNAME => trmikesl
DGN FILE => dpm2_043.dgn

CU 07000 | EA 001561

Return to Section 2 Table of Contents, page 2-36, page 2-37

INDEX OF SHEETS

DIST	COUNTY	ROUTE	KILOMETER POST TOTAL PROJECT	SHEET No	TOTAL SHEETS
11	SD	8,67	26.2/26.5, R0.2/R0.5		

STATE OF CALIFORNIA

DEPARTMENT OF TRANSPORTATION

PROJECT PLANS FOR CONSTRUCTION ON

STATE HIGHWAY

IN SAN DIEGO COUNTY
IN EL CAJON
ON ROUTE 8 FROM 0.3 km WEST OF MOLLISON AVENUE UNDERCROSSING TO MOLLISON AVENUE UNDERCROSSING AND ON ROUTE 67 FROM 0.2 km TO 0.5 km NORTH OF ROUTE 67/8 SEPARATION

To be supplemented by Standard Plans dated _____

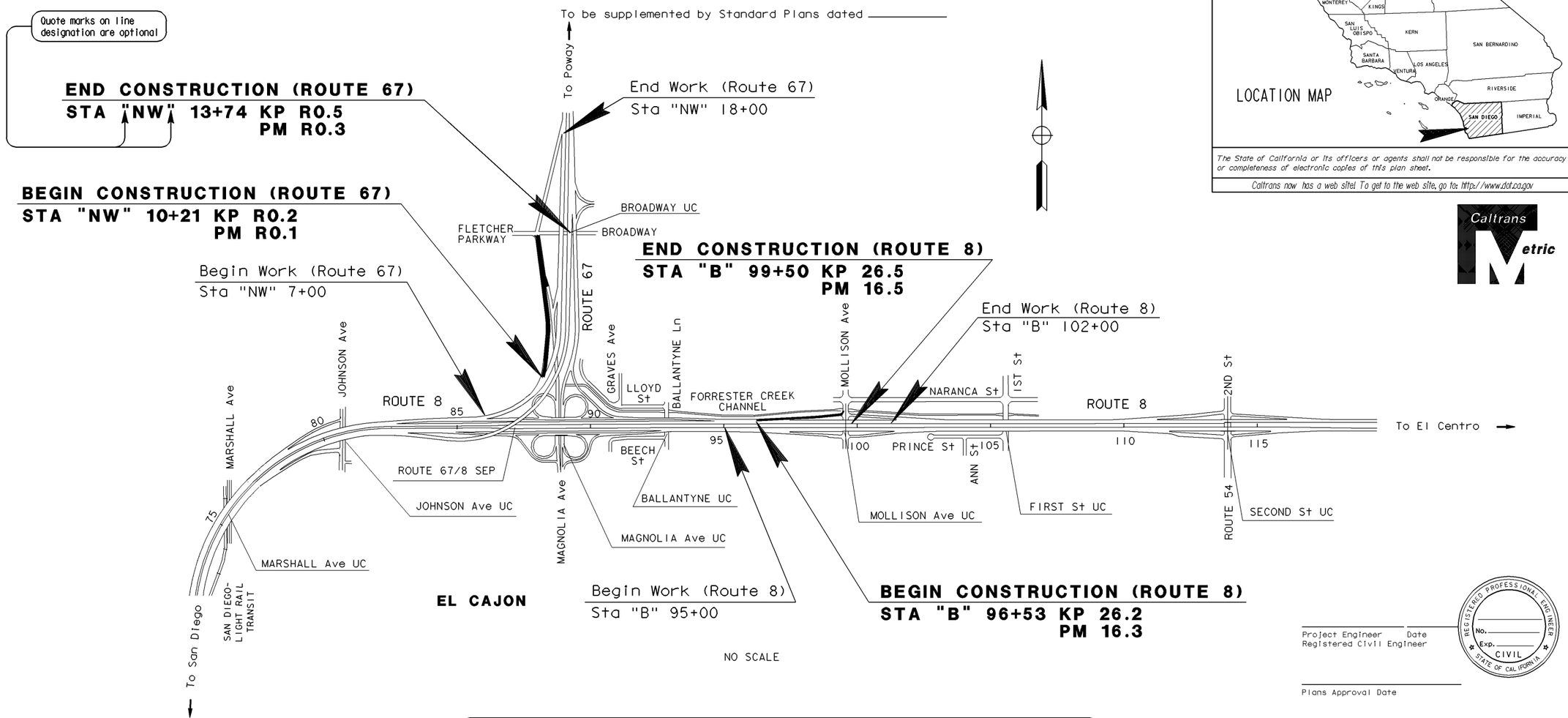

The State of California or its officers or agents shall not be responsible for the accuracy or completeness of electronic copies of this plan sheet.

Caltrans now has a web site! To get to the web site, go to: http://www.dot.ca.gov

Caltrans Metric

Project Engineer Date
Registered Civil Engineer

Plans Approval Date

REGISTERED PROFESSIONAL ENGINEER No. Exp. CIVIL STATE OF CALIFORNIA

The Contractor shall possess the Class (or Classes) of license as specified in the ''Notice to Contractors''.

TITLE SHEET, EXAMPLE "C" - CONSTRUCTION ON TWO ROUTES
(individual length of construction on each of two routes is 0.3 km or greater)

PROJECT ENGINEER	DATE	PROJECT MANAGER	DATE

Contract No. **11-001234**

LAST REVISION 04-02-01

FOR REDUCED PLANS ORIGINAL SCALE IS IN MILLIMETERS 0 20 40 60 80

CU 11000 EA 001234

Return to Section 2 Table of Contents, page 2-37

INDEX OF SHEETS

DIST	COUNTY	ROUTE	KILOMETER POST TOTAL PROJECT	SHEET No	TOTAL SHEETS
07	LA	5,118	63.4,18.3		

STATE OF CALIFORNIA

DEPARTMENT OF TRANSPORTATION

PROJECT PLANS FOR CONSTRUCTION ON

STATE HIGHWAY

IN LOS ANGELES COUNTY
IN LOS ANGELES
AT ROUTE 5/118 SEPARATION

To be supplemented by Standard Plans dated _____

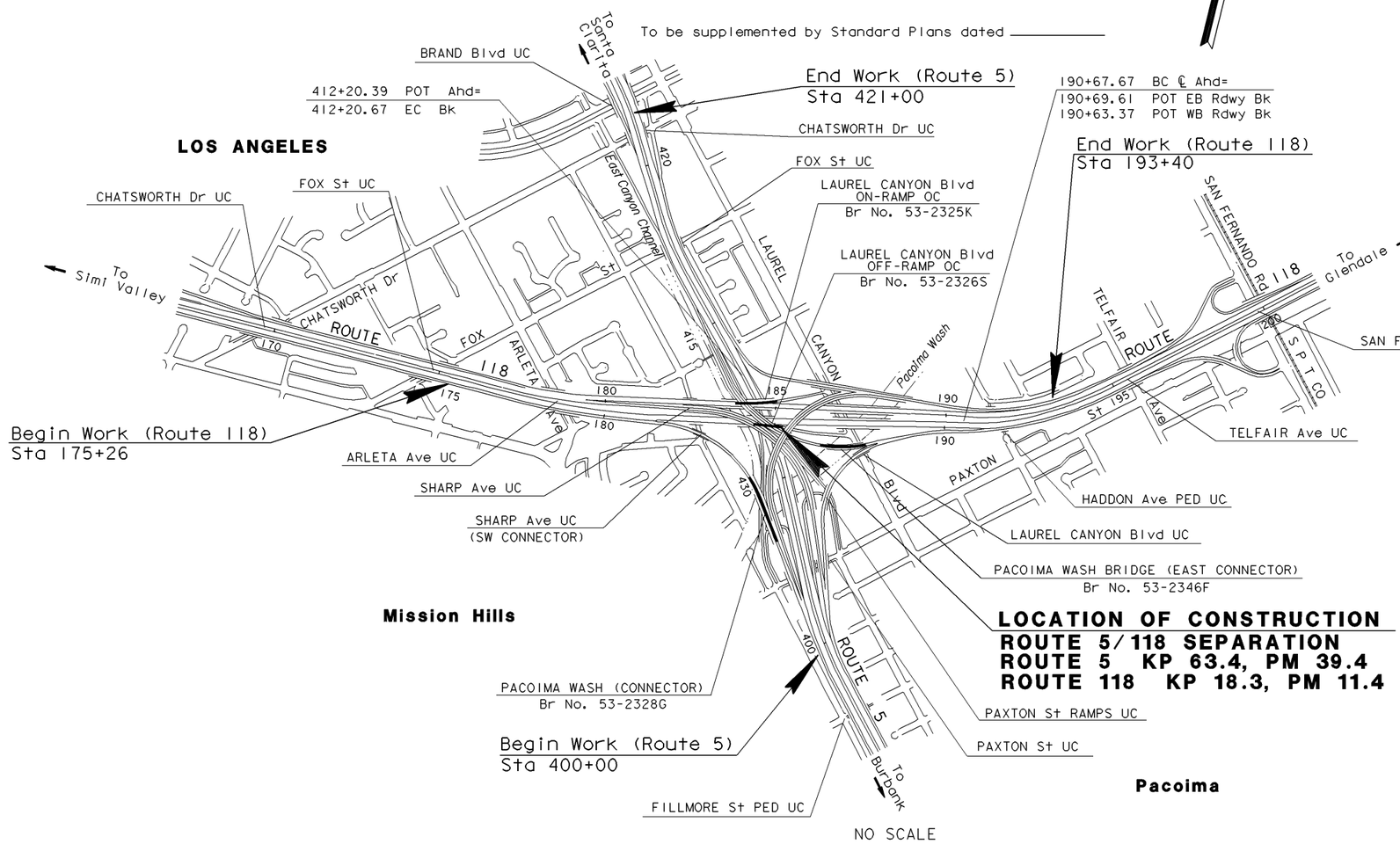

NO SCALE

LOCATION MAP

Caltrans

The State of California or its officers or agents shall not be responsible for the accuracy or completeness of electronic copies of this plan sheet.

Caltrans now has a web site! To get to the web site, go to: http://www.dot.ca.gov

Caltrans Metric

The Contractor shall possess the Class (or Classes) of license as specified in the ''Notice to Contractors''.

TITLE SHEET, EXAMPLE "D" - CONSTRUCTION AT A ROUTE SEPARATION
(construction at several locations within 0.6 km of a Route Separation)

Project Engineer Date
Registered Civil Engineer

Plans Approval Date

REGISTERED PROFESSIONAL ENGINEER No. Exp. CIVIL STATE OF CALIFORNIA

PROJECT ENGINEER | DATE | PROJECT MANAGER | DATE

LAST REVISION 04-04-01 | DATE PLOTTED => 10-APR-2001 TIME PLOTTED => 08:57

Contract No. 07-197124

FOR REDUCED PLANS ORIGINAL SCALE IS IN MILLIMETERS 0 20 40 60 80

USERNAME => trmikesl
DGN FILE => dpm2_045.dgn

CU 07000 | EA 197121

Return to Section 2 Table of Contents, page 2-37

INDEX OF SHEETS

DIST	COUNTY	ROUTE	KILOMETER POST TOTAL PROJECT	SHEET NO	TOTAL SHEETS
07	LA	5	R74.9/R79.3		

STATE OF CALIFORNIA

DEPARTMENT OF TRANSPORTATION

PROJECT PLANS FOR CONSTRUCTION ON

STATE HIGHWAY

IN LOS ANGELES COUNTY
NEAR NEWHALL AT VARIOUS LOCATIONS
FROM 0.1 km SOUTH OF WELDON CANYON OVERCROSSING
TO 0.3 km NORTH OF CALGROVE BOULEVARD UNDERCROSSING

To be supplemented by Standard Plans dated _____

TEXT
CADD
(1) FT=2, WT=2, TX=2.2
Upper Case

The State of California or its officers or agents shall not be responsible for the accuracy or completeness of electronic copies of this plan sheet.

Caltrans now has a web site! To get to the web site, go to: http://www.dot.ca.gov

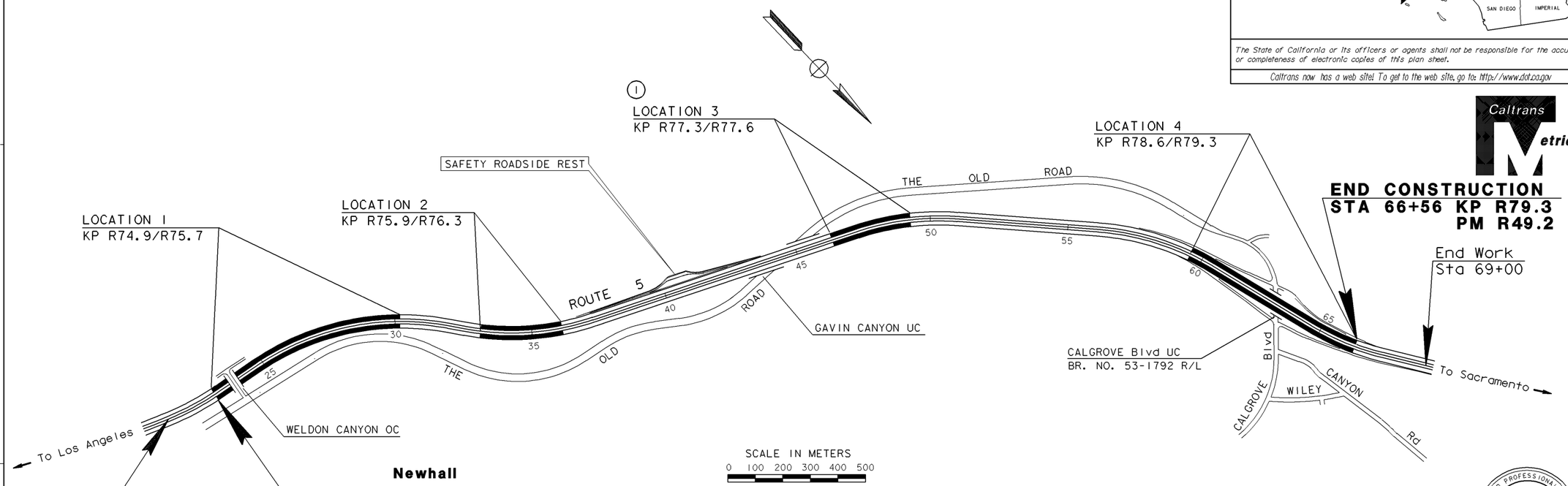

Caltrans Metric

Project Engineer Date
Registered Civil Engineer

REGISTERED PROFESSIONAL ENGINEER
No.
Exp.
CIVIL
STATE OF CALIFORNIA

Plans Approval Date

The Contractor shall possess the Class (or Classes) of license as specified in the ''Notice to Contractors''.

TITLE SHEET, EXAMPLE "E" - CONSTRUCTION ON ONE ROUTE AT VARIOUS LOCATIONS
(three or more construction locations on one route)

Contract No. 07-117134

PROJECT ENGINEER | DATE | PROJECT MANAGER | DATE

LAST REVISION 04-02-01 | DATE PLOTTED => 10-APR-2001 | TIME PLOTTED => 08:57

FOR REDUCED PLANS ORIGINAL SCALE IS IN MILLIMETERS 0 20 40 60 80

USERNAME => trmikesl
DGN FILE => dpm2_046.dgn

CU 07000 | EA 171131

Return to Section 2 Table of Contents, page 2-37

INDEX OF SHEETS

STATE OF CALIFORNIA
DEPARTMENT OF TRANSPORTATION

PROJECT PLANS FOR CONSTRUCTION ON
STATE HIGHWAY

IN LOS ANGELES COUNTY
IN LOS ANGELES
FROM LOS ANGELES RIVER BRIDGE AND OVERHEAD
TO 0.2 km WEST OF VERMONT AVENUE OVERCROSSING

DIST	COUNTY	ROUTE	KILOMETER POST TOTAL PROJECT	SHEET No	TOTAL SHEETS
07	LA	101	0.2/7.2		

The State of California or its officers or agents shall not be responsible for the accuracy or completeness of electronic copies of this plan sheet.

Caltrans now has a web site! To get to the web site, go to: http://www.dot.ca.gov

BEGIN WORK AND CONSTRUCTION
STA 71+63 KP 0.2 PM 0.1

Caltrans Metric

To Ventura

VERMONT Ave OC
58+48.54 BK=
5+57.49 AHD

HOOVER St UC

VIRGIL Ave UC

SILVER LAKE Blvd UC

BENTON WAY OC

VENDOME St UC

CORONADO St UC

ROSEMONT Ave OC

LOS ANGELES

ECHO PARK PED UC

LA VETA TERRACE PED UC

41+27.84 BC BK=
41+31.17 BC AHD

E EDGEWARE Rd OC

PARKMAN Ave PED UC

ROUTE 101/2 SEP (ALVARADO ST)

BONNIE BRAE St OC

BELMONT Ave PED OC

GLENDALE Blvd UC

END WORK AND CONSTRUCTION
STA 57+60 KP 7.2 PM 4.5

To San Bernardino

LA RIVER BOH

ROUTE 101/110 SEP

FIGUEROA St UC

BEAUDRY Ave UC

TEMPLE St UC

SUNSET Blvd

GRAND Ave OC

BROADWAY OC

HILL St OC

SPRING St OC

ALAMEDA St OC

MAIN St OC

LOS ANGELES St OC

TEMPLE St

LOS ANGELES

NO SCALE

TEXT
CADD
FT=23, WT=1, TX=1.8
Upper/Lower Case

Project Engineer Date
Registered Civil Engineer

Plans Approval Date

REGISTERED PROFESSIONAL ENGINEER
No.
Exp.
CIVIL
STATE OF CALIFORNIA

TITLE SHEET, EXAMPLE "F" - CONSTRUCTION ON ONE ROUTE
(Stationing in opposite direction of kilometer posts -
Begin and End points of Work and Construction shown in order of kilometer posts)

The Contractor shall possess the Class (or Classes) of license as specified in the ''Notice to Contractors''.

PROJECT ENGINEER | DATE | PROJECT MANAGER | DATE

Contract No. **07-010124**

LAST REVISION 04-02-01 | DATE PLOTTED => 10-APR-2001 | TIME PLOTTED => 08:57

FOR REDUCED PLANS ORIGINAL SCALE IS IN MILLIMETERS 0 20 40 60 80

USERNAME => trmikesl
DGN FILE => dpm2_047.dgn

CU 07000 | EA 010121

Return to Section 2 Table of Contents, page 2-37

INDEX OF SHEETS

DIST	COUNTY	ROUTE	KILOMETER POST TOTAL PROJECT	SHEET NO	TOTAL SHEETS
01	Men	1	80.8		

STATE OF CALIFORNIA

DEPARTMENT OF TRANSPORTATION

PROJECT PLANS FOR CONSTRUCTION ON

STATE HIGHWAY

IN MENDOCINO COUNTY
NEAR MENDOCINO
AT BIG BEAR BRIDGE

To be supplemented by Standard Plans dated _____

LOCATION MAP

The State of California or its officers or agents shall not be responsible for the accuracy or completeness of electronic copies of this plan sheet.

Caltrans now has a web site! To get to the web site, go to: http://www.dot.ca.gov

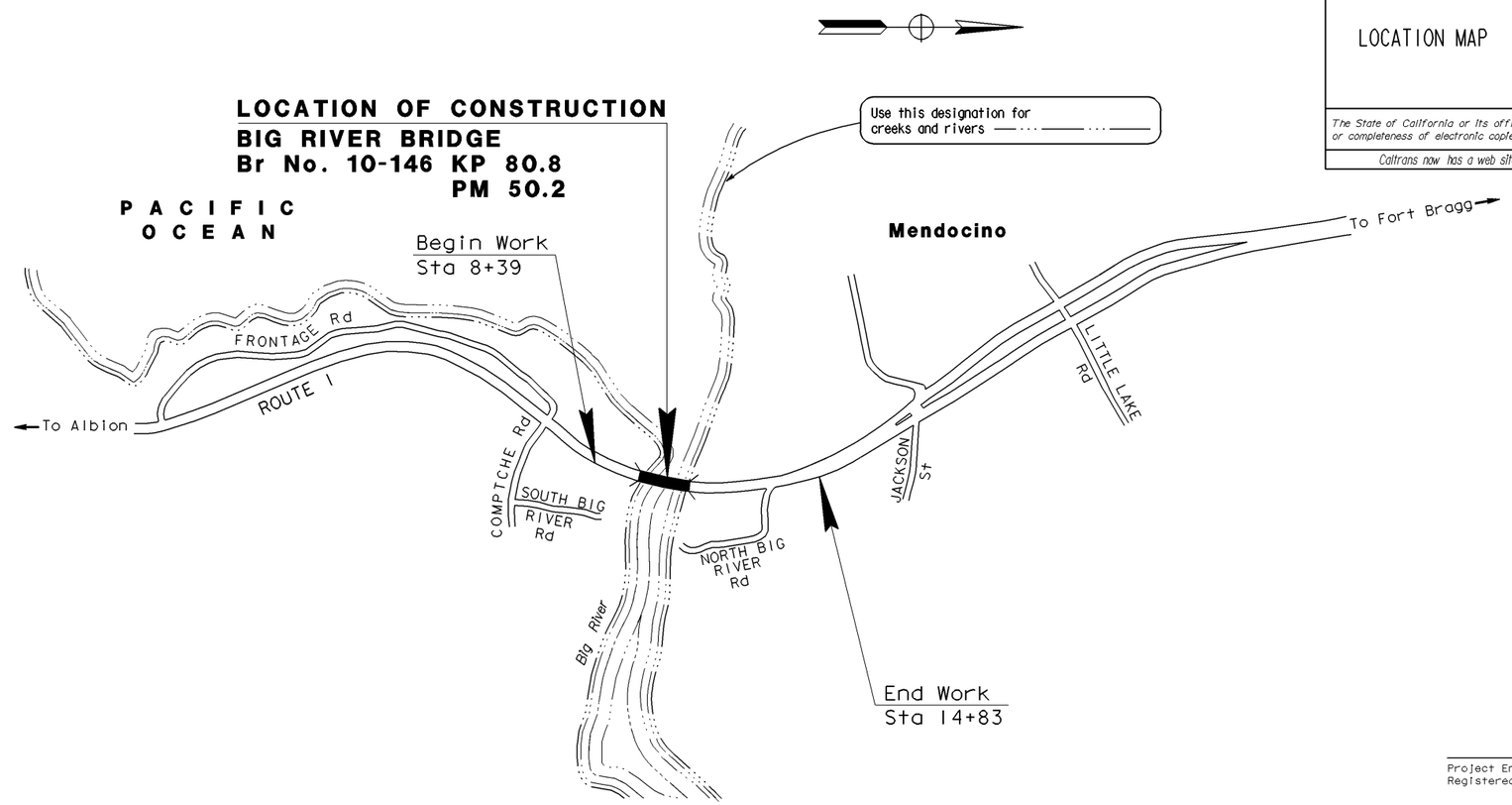

NO SCALE

Project Engineer Date
Registered Civil Engineer

Plans Approval Date

REGISTERED PROFESSIONAL ENGINEER
No.
Exp.
CIVIL
STATE OF CALIFORNIA

TITLE SHEET, EXAMPLE "G" - CONSTRUCTION ON ONE ROUTE AT A SPOT LOCATION

(Use single kilometer post when length of construction is less than 0.3 km)

The Contractor shall possess the Class (or Classes) of license as specified in the ''Notice to Contractors''.

PROJECT ENGINEER | DATE | PROJECT MANAGER | DATE

LAST REVISION 04-02-01 | DATE PLOTTED => 10-APR-2001 | TIME PLOTTED => 08:57

Contract No. **01-123454**

FOR REDUCED PLANS ORIGINAL SCALE IS IN MILLIMETERS 0 20 40 60 80

USERNAME => trmikesl
DGN FILE => dpm2_048.dgn

CU 01000 | EA 123451

Return to Section 2 Table of Contents, page 2-36, page 2-37

INDEX OF SHEETS

DIST	COUNTY	ROUTE	KILOMETER POST TOTAL PROJECT	SHEET No	TOTAL SHEETS
06	Fre	99	43.9, 45.7		

STATE OF CALIFORNIA

DEPARTMENT OF TRANSPORTATION

PROJECT PLANS FOR CONSTRUCTION ON

STATE HIGHWAY

IN FRESNO COUNTY
IN FRESNO
AT BIOLA JUNCTION OVERHEAD
AND AT HERNDON CANAL BRIDGE

To be supplemented by Standard Plans dated _____

LOCATION MAP

Caltrans

The State of California or its officers or agents shall not be responsible for the accuracy or completeness of electronic copies of this plan sheet.

Caltrans now has a web site! To get to the web site, go to: http://www.dot.ca.gov

Caltrans Metric

LOCATION OF CONSTRUCTION
BIOLA JUNCTION OVERHEAD
Br No. 42-131 L/R KP 43.9
PM 27.3

LOCATION OF CONSTRUCTION
HERNDON CANAL BRIDGE
Br No. 42-129 L/R KP 45.7
PM 28.4

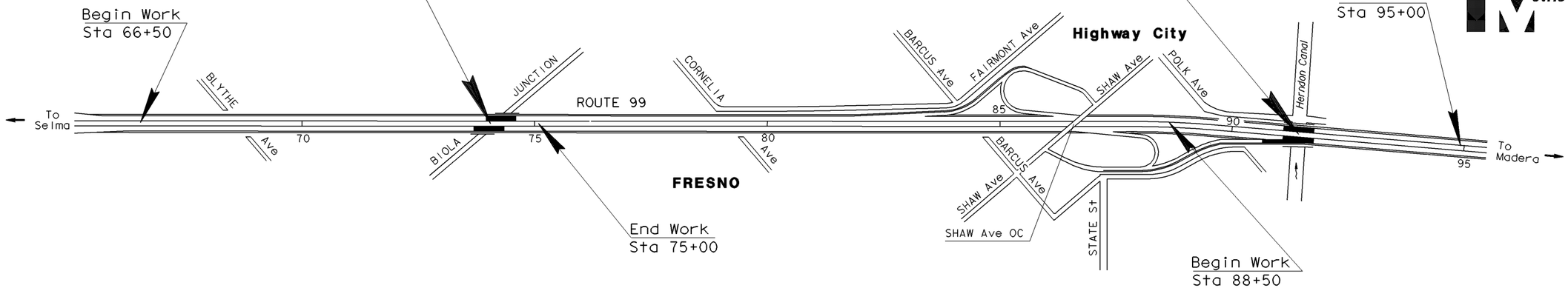

NO SCALE

Project Engineer Date
Registered Civil Engineer

Plans Approval Date

REGISTERED PROFESSIONAL ENGINEER
No.
Exp.
CIVIL
STATE OF CALIFORNIA

The Contractor shall possess the Class (or Classes) of license as specified in the ''Notice to Contractors''.

TITLE SHEET, EXAMPLE "H" - CONSTRUCTION ON ONE ROUTE AT TWO SPOT LOCATIONS
(Use two single kilometer post when individual lengths of construction are less than 0.3 km)

PROJECT ENGINEER | DATE | PROJECT MANAGER | DATE

LAST REVISION 04-02-01 | DATE PLOTTED => 10-APR-2001 | TIME PLOTTED => 08:57

Contract No. **06-123654**

FOR REDUCED PLANS ORIGINAL SCALE IS IN MILLIMETERS 0 20 40 60 80

USERNAME => trmikesi
DGN FILE => dpm2_049.dgn

CU 06000 | EA 123651

Return to Section 2 Table of Contents, page 2-37

INDEX OF SHEETS

DIST	COUNTY	ROUTE	KILOMETER POST TOTAL PROJECT	SHEET NO	TOTAL SHEETS
07	LA	210	R17.4/R38.9		

STATE OF CALIFORNIA

DEPARTMENT OF TRANSPORTATION

PROJECT PLANS FOR CONSTRUCTION ON

STATE HIGHWAY

IN LOS ANGELES COUNTY
IN LOS ANGELES, GLENDALE, LA CANADA FLINTRIDGE AND PASADENA
FROM 0.5 km WEST OF SUNLAND BOULEVARD UNDERCROSSING TO 0.3 km EAST OF MOUNTAIN STREET UNDERCROSSING

To be supplemented by Standard Plans dated _____

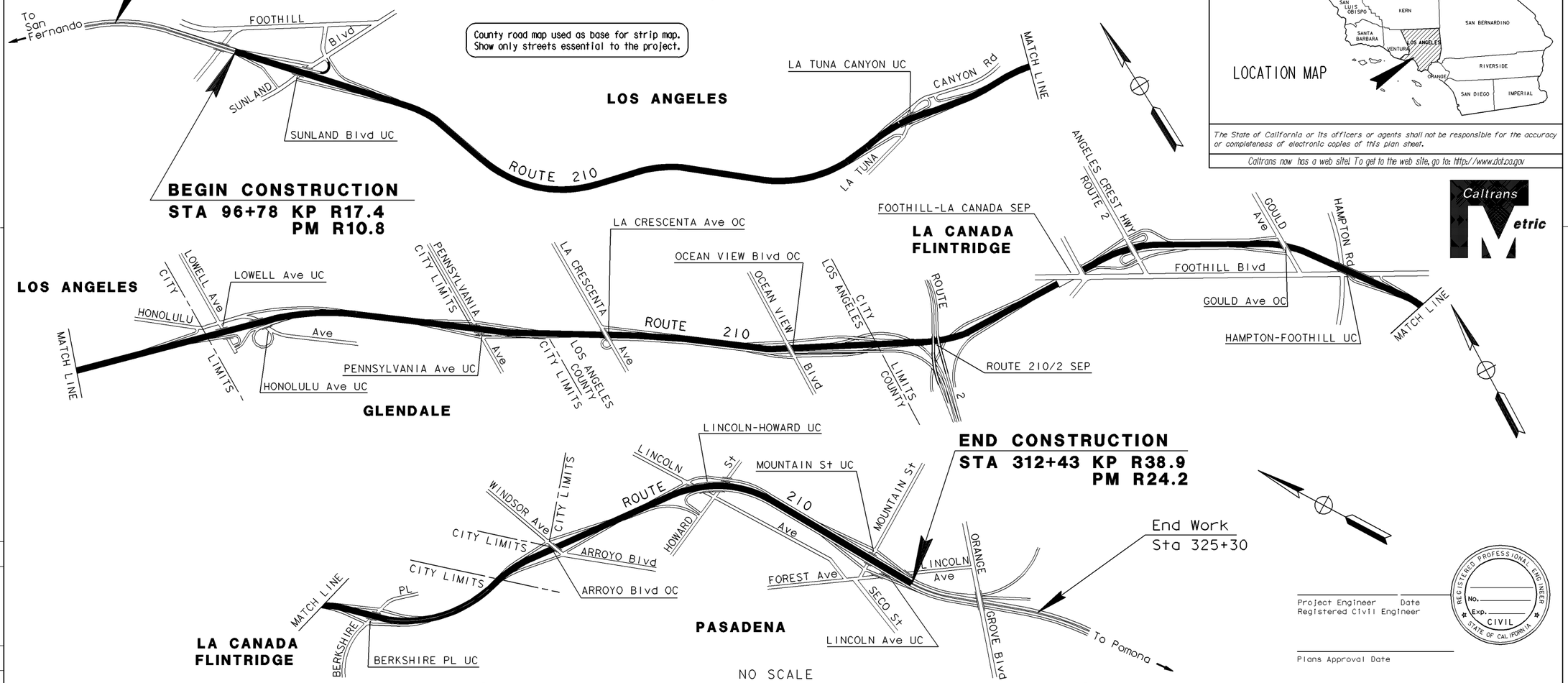

Caltrans

The State of California or its officers or agents shall not be responsible for the accuracy or completeness of electronic copies of this plan sheet.

Caltrans now has a web site! To get to the web site, go to: http://www.dot.ca.gov

Caltrans Metric

Project Engineer Date
Registered Civil Engineer

Plans Approval Date

REGISTERED PROFESSIONAL ENGINEER No. Exp. CIVIL STATE OF CALIFORNIA

The Contractor shall possess the Class (or Classes) of license as specified in the ''Notice to Contractors''.

TITLE SHEET, EXAMPLE "I" - CONSTRUCTION ON ONE ROUTE
(Work of a continuous nature where construction is lengthy)

Contract No. **07-154324**

PROJECT ENGINEER | DATE | PROJECT MANAGER | DATE

LAST REVISION 04-02-01 | DATE PLOTTED => 10-APR-2001 | TIME PLOTTED => 08:58

FOR REDUCED PLANS ORIGINAL SCALE IS IN MILLIMETERS 0 20 40 60 80

USERNAME => trmikesl
DGN FILE => dpm2_050.dgn

CU 07000 | EA 154321

Return to Section 2 Table of Contents, page 2-37

INDEX OF SHEETS

STATE OF CALIFORNIA
DEPARTMENT OF TRANSPORTATION

PROJECT PLANS FOR CONSTRUCTION ON
STATE HIGHWAY

IN SANTA CLARA AND SANTA CRUZ COUNTIES
AT VARIOUS LOCATIONS

DIST	COUNTY	ROUTE	KILOMETER POST TOTAL PROJECT	SHEET No	TOTAL SHEETS
04	SCl, SCr	1, 9, 17, 280, 880	Var		

See Section 2-1. 2(C)

The State of California or its officers or agents shall not be responsible for the accuracy or completeness of electronic copies of this plan sheet.

Caltrans now has a web site! To get to the web site, go to: http://www.dot.ca.gov

District map used as base for strip map. Only routes were used. Do not use route shields or freeway names to identify routes.

To be supplemented by Standard Plans dated _____

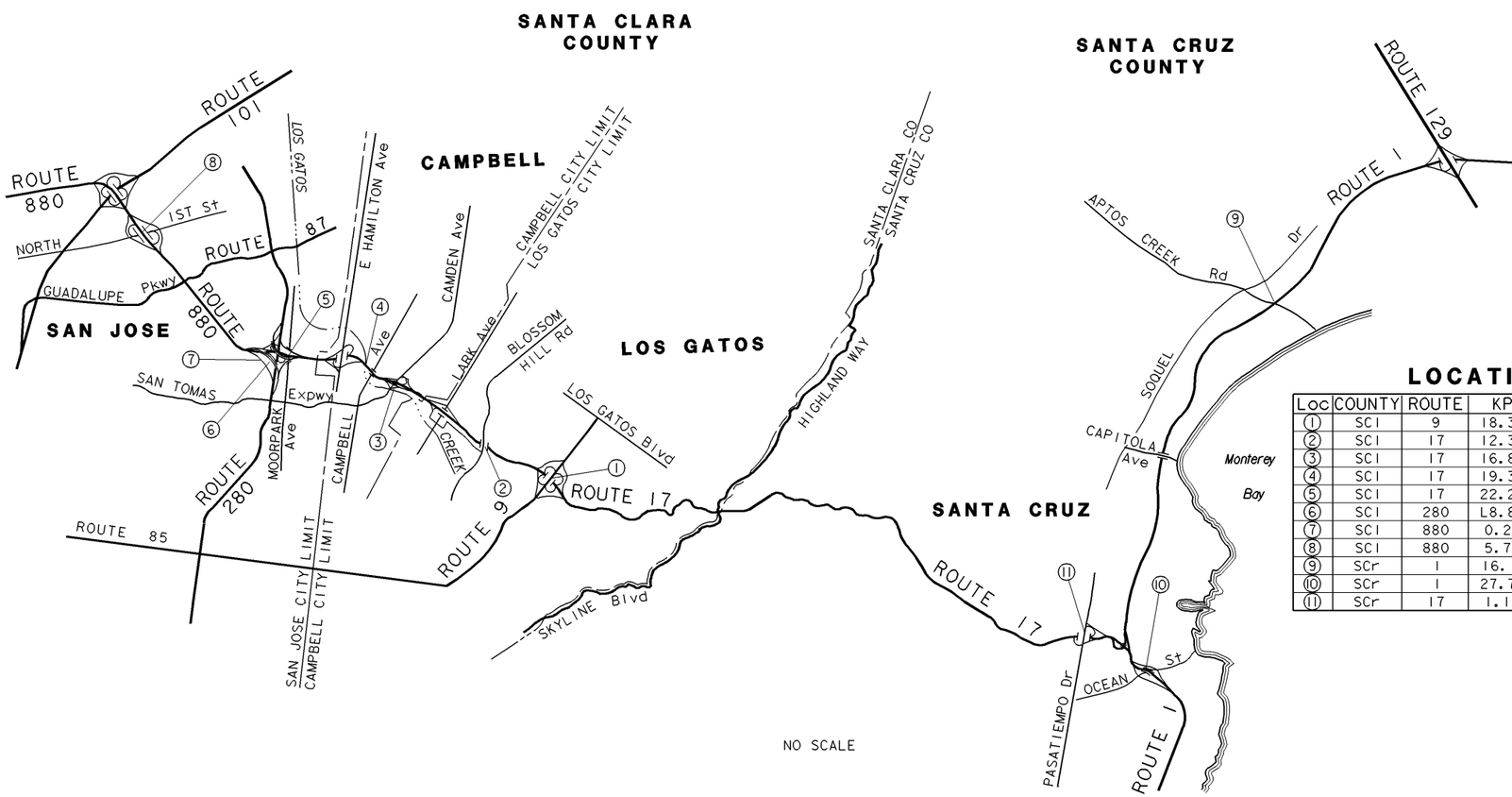

LOCATIONS OF CONSTRUCTION

Loc	COUNTY	ROUTE	KP	PM	NAME OF BRIDGE	BRIDGE No.
1	SCl	9	18.39	11.43	ROUTE 9/17 SEPARATION	37-144
2	SCl	17	12.34	7.67	BLOSSOM HILL ROAD OC	37-148
3	SCl	17	16.89	10.50	CAMDEN AVENUE UC	37-147
4	SCl	17	19.36	12.03	LOS GATOS CREEK	37-134
5	SCl	17	22.29	13.85	MOORPARK AVENUE UC	37-139G
6	SCl	280	L8.85	L5.50	NORTH Conn VIADUCT (S280/N880)	37-193F
7	SCl	880	0.24	0.15	SB COLLECTOR ROAD OC	37-191K
8	SCl	880	5.73	3.56	NORTH FIRST STREET UC	37-140
9	SCr	1	16.11	10.01	APTOS CREEK	36-11
10	SCr	1	27.74	17.24	OCEAN STREET UC	36-70L & R
11	SCr	17	1.19	0.74	PASATIEMPO DRIVE OC	36-76

Project Engineer Date
Registered Civil Engineer

REGISTERED PROFESSIONAL ENGINEER No. Exp. CIVIL STATE OF CALIFORNIA

Plans Approval Date

The Contractor shall possess the Class (or Classes) of license as specified in the ''Notice to Contractors''.

TITLE SHEET, EXAMPLE "J" - CONSTRUCTION ON MULTIPLE ROUTES IN TWO COUNTIES AT VARIOUS LOCATIONS

Contract No. **04-135624**

PROJECT ENGINEER | DATE | PROJECT MANAGER | DATE

LAST REVISION 04-02-01 | DATE PLOTTED => 10-APR-2001 | TIME PLOTTED => 08:58

FOR REDUCED PLANS ORIGINAL SCALE IS IN MILLIMETERS 0 20 40 60 80

USERNAME => trmikesl
DGN FILE => dpm2_051.dgn

CU 04000 | EA 135621

Return to Section 2 Table of Contents, page 2-37

INDEX OF SHEETS

STATE OF CALIFORNIA
DEPARTMENT OF TRANSPORTATION

PROJECT PLANS FOR CONSTRUCTION ON
STATE HIGHWAY

IN IMPERIAL COUNTY
AT VARIOUS LOCATIONS
FROM ROUTE 8/111 SEPARATION TO
0.6 km EAST OF 4TH AVENUE OVERCROSSING

To be supplemented by Standard Plans dated _____

DIST	COUNTY	ROUTE	KILOMETER POST TOTAL PROJECT	SHEET NO	TOTAL SHEETS
11	Imp	8	R65.8/R155.9		

The State of California or its officers or agents shall not be responsible for the accuracy or completeness of electronic copies of this plan sheet.

Caltrans now has a web site! To get to the web site, go to: http://www.dot.ca.gov

Caltrans Metric

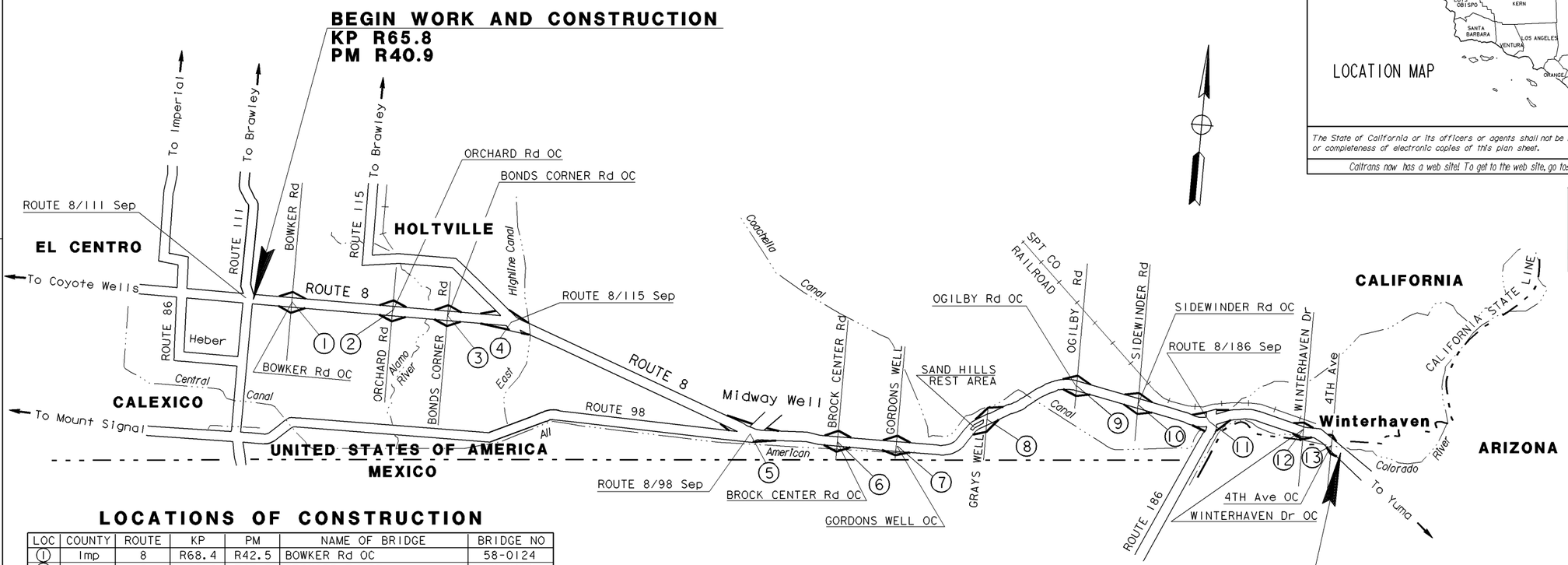

LOCATIONS OF CONSTRUCTION

LOC	COUNTY	ROUTE	KP	PM	NAME OF BRIDGE	BRIDGE NO
1	Imp	8	R68.4	R42.5	BOWKER Rd OC	58-0124
2	Imp	8	R76.9	R47.8	ORCHARD Rd OC	58-0128
3	Imp	8	R81.3	R50.5	BONDS CORNER Rd OC	58-0220
4	Imp	8	R86.1	R53.5	ROUTE 8 / 115 SEPARATION	58-0222
5	Imp	8	R105.9	R65.8	ROUTE 8 / 98 SEPARATION	58-0302
6	Imp	8	R110.7	R68.8	BROCK CENTER Rd OC	58-0303
7	Imp	8	R118.3	R73.5	GORDONS WELL OC	58-0304
8	Imp	8	R124.7	77.5	GRAYS WELL OC	58-0306
9	Imp	8	R134.9	R83.8	OGILBY Rd OC	58-0300
10	Imp	8	R142.7	R88.7	SIDEWINDER Rd OC	58-0302
11	Imp	8	R146.0	R90.7	ROUTE 8 / 186 SEPARATION	58-0
12	Imp	8	R152.9	R95.0	WINTERHAVEN Dr OC	58-0
13	Imp	8	R155.5	R96.6	4TH Ave OC	58-0

The Contractor shall possess the Class (or Classes) of license as specified in the ''Notice to Contractors''.

TITLE SHEET, EXAMPLE "K" - CONSTRUCTION ON ONE ROUTE AT VARIOUS LOCATIONS

(Identified points of Beginning and End of Construcrion for construction locations spread more than 50 km on a single route)

Project Engineer Date
Registered Civil Engineer

Plans Approval Date

REGISTERED PROFESSIONAL ENGINEER No. Exp. CIVIL STATE OF CALIFORNIA

PROJECT ENGINEER | DATE | PROJECT MANAGER | DATE

LAST REVISION 04-02-01 | DATE PLOTTED => 10-APR-2001 TIME PLOTTED => 08:58

Contract No. 11-176014

FOR REDUCED PLANS ORIGINAL SCALE IS IN MILLIMETERS 0 20 40 60 80

USERNAME => trmikesl
DGN FILE => dpm2_052.dgn

CU 11000 | EA 176011

Return to Section 2 Table of Contents, page 2-37

INDEX OF SHEETS

STATE OF CALIFORNIA
DEPARTMENT OF TRANSPORTATION

PROJECT PLANS FOR CONSTRUCTION ON
STATE HIGHWAY

IN SAN BERNARDINO, LOS ANGELES AND RIVERSIDE COUNTIES AT VARIOUS LOCATIONS

To be supplemented by Standard Plans dated _____

District map used as base for strip map. Only routes were used. Do not use route shields or freeway names to identify routes. Enlarge or reduce as necessary to fit each project.

DIST	COUNTY	ROUTE	KILOMETER POST TOTAL PROJECT	SHEET No	TOTAL SHEETS
08	SBd, Riv, LA	18, 71, 138, 173, 189, 247	Var		

All counties and routes must be listed where work is to be performed. Routes should be listed in numerical order. See Section 2-1.2(C)

The State of California or its officers or agents shall not be responsible for the accuracy or completeness of electronic copies of this plan sheet.

Caltrans now has a web site! To get to the web site, go to: http://www.dot.ca.gov

Caltrans Metric

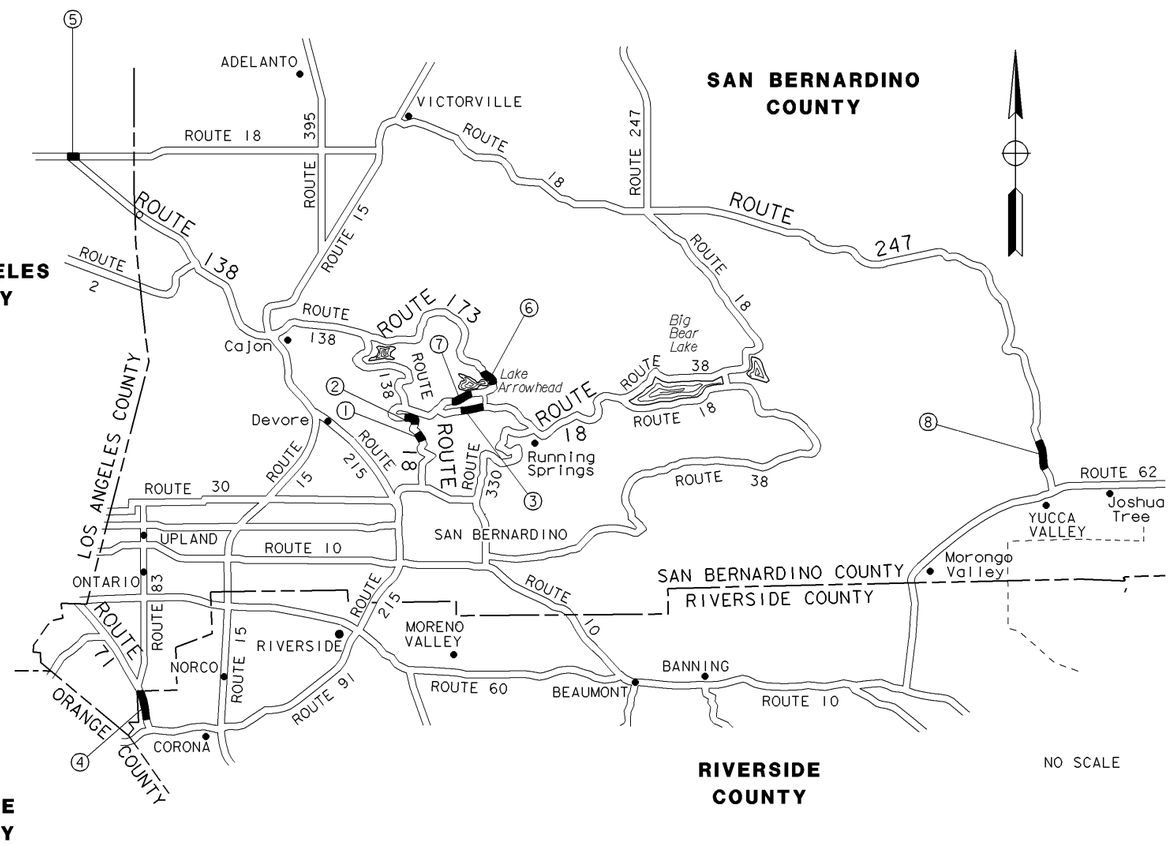

LOCATIONS OF CONSTRUCTION

LOC	COUNTY	ROUTE	KP	PM	DESCRIPTION
1	SBd	18	18.2/19.5	11.3/12.1	0.2 km S OF GRANITE VIADUCT TO 0.3 km S OF DOGWOOD VIADUCT
2	SBd	18	23.5/25.1	14.6/15.6	0.3 km S OF BONNIE CANYON Br TO 0.5 km S OF OLD UPPER WATERMANN CANYON Rd
3	SBd	18	35.9/39.7	22.3/24.7	0.4 km S OF PINE WEST TO Jct ROUTE 173
4	Riv	71	0.0/R5.5	0.0/R3.4	SAN BERNARDINO Co LINE TO Jct ROUTE 91
5	LA	138	111.5/112.3	69.3/69.8	AT INTERSECTION WITH ROUTE 18 IN LA Co
6	SBD	173	27.4/3.06	17.0/19.0	ARBON Ln TO EMERALD Dr
7	SBd	189	2.3/6.4	1.4/4.0	0.2 km E OF MILE HIGH Rd TO TRAILER PARK ENTRANCE
8	SBd	247	2.9/5.6	1.8/3.5	El CORTEZ Rd TOTERRA VISTA Dr

Project Engineer Date
Registered Civil Engineer

Plans Approval Date

REGISTERED PROFESSIONAL ENGINEER No. Exp. CIVIL STATE OF CALIFORNIA

The Contractor shall possess the Class (or Classes) of license as specified in the ''Notice to Contractors''.

TITLE SHEET, EXAMPLE "L" - CONSTRUCTION ON MULTIPLE ROUTES IN MULTIPLE COUNTIES

PROJECT ENGINEER | DATE | PROJECT MANAGER | DATE

LAST REVISION 04-02-01 | DATE PLOTTED => 10-APR-2001 | TIME PLOTTED => 08:58

Contract No. 08-135924

FOR REDUCED PLANS ORIGINAL SCALE IS IN MILLIMETERS 0 20 40 60 80

USERNAME => trmikesl
DGN FILE => dpm2_053.dgn

CU 08000 | EA 135921

Return to Section 2 Table of Contents, page 2-37

INDEX OF SHEETS

DIST	COUNTY	ROUTE	KILOMETER POST TOTAL PROJECT	SHEET NO	TOTAL SHEETS
07	LA	101	37.5/40.9		

STATE OF CALIFORNIA

DEPARTMENT OF TRANSPORTATION

PROJECT PLANS FOR CONSTRUCTION ON

STATE HIGHWAY

IN LOS ANGELES COUNTY
IN LOS ANGELES
FROM WINNETKA AVENUE OVERCROSSING
TO ROUTE 101/27 SEPARATION

To be supplemented by Standard Plans dated _____

LOCATION MAP

The State of California or its officers or agents shall not be responsible for the accuracy or completeness of electronic copies of this plan sheet.

Caltrans now has a web site! To get to the web site, go to: http://www.dot.ca.gov

Add note and revised project development name block for consultant prepared projects. See Figure 2-4 of Section 2-1. 2(B).

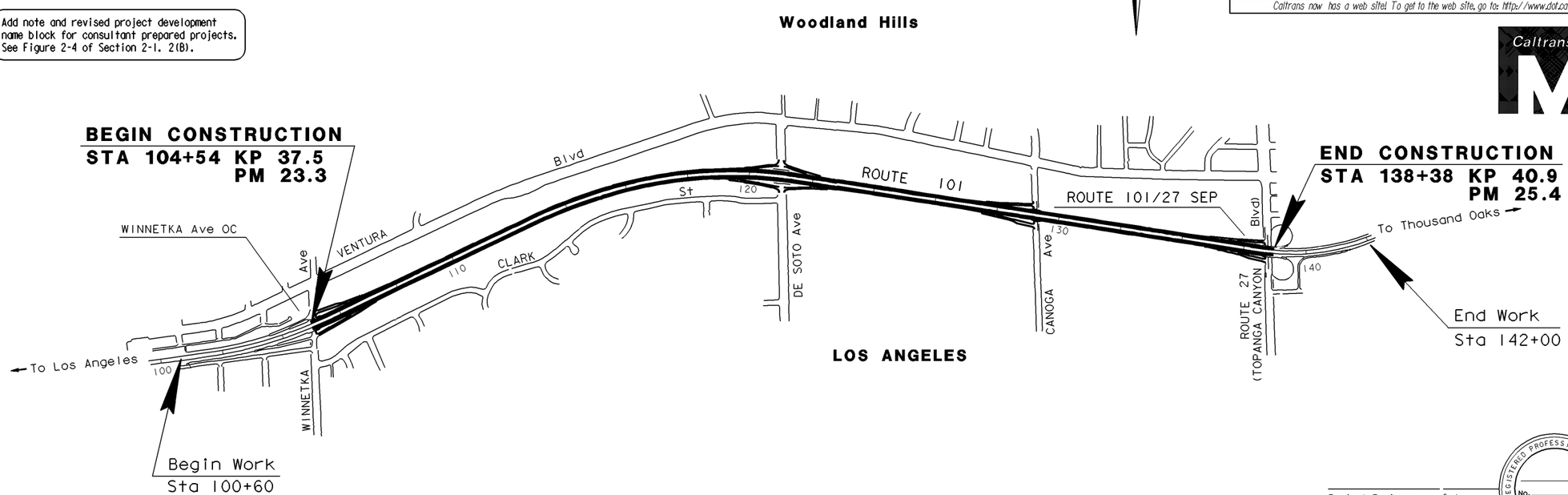

Approved as to impact on State facilities and conformance with applicable State standards and practices and that technical oversight was performed as described in the California Department of Transportation A & E Consultant Service Manual.

PROJECT ENGINEER | DESIGN OVERSIGHT APPROVAL | PRINTED NAME | SIGNATURE | REGISTRATION NO. | DATE

The Contractor shall possess the Class (or Classes) of license as specified in the ''Notice to Contractors''.

TITLE SHEET, EXAMPLE "M" - CONSTRUCTION ON ONE ROUTE
(Consultant Prepared Project)

Project Engineer Date
Registered Civil Engineer

REGISTERED PROFESSIONAL ENGINEER No. Exp. CIVIL STATE OF CALIFORNIA

Plans Approval Date

Add this block for consultant prepared projects. See Figure 2-3 of Section 2-1.2(B).

ABC INC.
1234 MAIN STREET
ANY TOWN, CA 56789-1234

Contract No. 07-156794

LAST REVISION 04-02-01

DATE PLOTTED => 10-APR-2001
TIME PLOTTED => 08:58

FOR REDUCED PLANS ORIGINAL SCALE IS IN MILLIMETERS 0 20 40 60 80

USERNAME => trmikesl
DGN FILE => dpm2_054.dgn

CU 07000 | EA 156791

Return to Section 2 Table of Contents, page 2-37

INDEX OF SHEETS

STATE OF CALIFORNIA
DEPARTMENT OF TRANSPORTATION

PROJECT PLANS FOR CONSTRUCTION ON
STATE HIGHWAY

IN SAN MATEO COUNTY AND
THE CITY AND COUNTY OF SAN FRANCISCO
FROM 0.4 km NORTH OF JOHN DALY BOULEVARD OVERCROSSING
TO 0.6 km NORTH OF BROTHERHOOD WAY UNDERCROSSING

To be supplemented by Standard Plans dated _____

DIST	COUNTY	ROUTE	KILOMETER POST TOTAL PROJECT	SHEET No	TOTAL SHEETS
04	SM, SF	1	R78.1/R78.2, R0.0/R0.7		

The State of California or its officers or agents shall not be responsible for the accuracy or completeness of electronic copies of this plan sheet.

Caltrans now has a web site! To get to the web site, go to: http://www.dot.ca.gov

END CONSTRUCTION
STA 68+24.00 KP R0.7
PM R0.5

End Work
Sta 72+81.00

SM-1-KP R78.2=
SF-1-KP R0.0

SM: Sta 60+68.72=
SF: Sta 60+68.72

Begin Work
Sta 55+81.00

BROTHERHOOD WAY UC
Br No. 34-0044

BEGIN CONSTRUCTION
STA 60+38.72 KP R78.1
PM R48.5

S A N F R A N C I S C O

Project Engineer Date
Registered Civil Engineer

Plans Approval Date

REGISTERED PROFESSIONAL ENGINEER
No.
Exp.
CIVIL
STATE OF CALIFORNIA

NO SCALE

TITLE SHEET, EXAMPLE "N" - CONSTRUCTION ON ONE ROUTE IN TWO COUNTIES

The Contractor shall possess the Class (or Classes) of license as specified in the ''Notice to Contractors''.

PROJECT ENGINEER | DATE | PROJECT MANAGER | DATE

LAST REVISION 04-02-01 | DATE PLOTTED => 10-APR-2001 | TIME PLOTTED => 08:58

Contract No. **04-256704**

FOR REDUCED PLANS ORIGINAL SCALE IS IN MILLIMETERS 0 20 40 60 80

USERNAME => trmikesl
DGN FILE => dpm2_055.dgn

CU 04000 | EA 256701

Return to Section 2 Table of Contents, page 2-37

INDEX OF SHEETS

DIST	COUNTY	ROUTE	KILOMETER POST TOTAL PROJECT	SHEET No	TOTAL SHEETS
11	SD	5, 15	R19.3/R21.1, 0.7/R0.3		

STATE OF CALIFORNIA

DEPARTMENT OF TRANSPORTATION

PROJECT PLANS FOR HIGHWAY PLANTING

STATE HIGHWAY

IN SAN DIEGO COUNTY
IN SAN DIEGO
ON ROUTE 5 FROM VESTA STREET UNDERCROSSING TO 30TH STREET PEDESTRIAN OVERCROSSING AND ON ROUTE 15 FROM NATIONAL AVENUE UNDERCROSSING TO SOUTH CHOLLAS CREEK BRIDGE

To be supplemented by Standard Plans dated _____

The State of California or its officers or agents shall not be responsible for the accuracy or completeness of electronic copies of this plan sheet.

Caltrans now has a web site! To get to the web site, go to: http://www.dot.ca.gov

Caltrans Metric

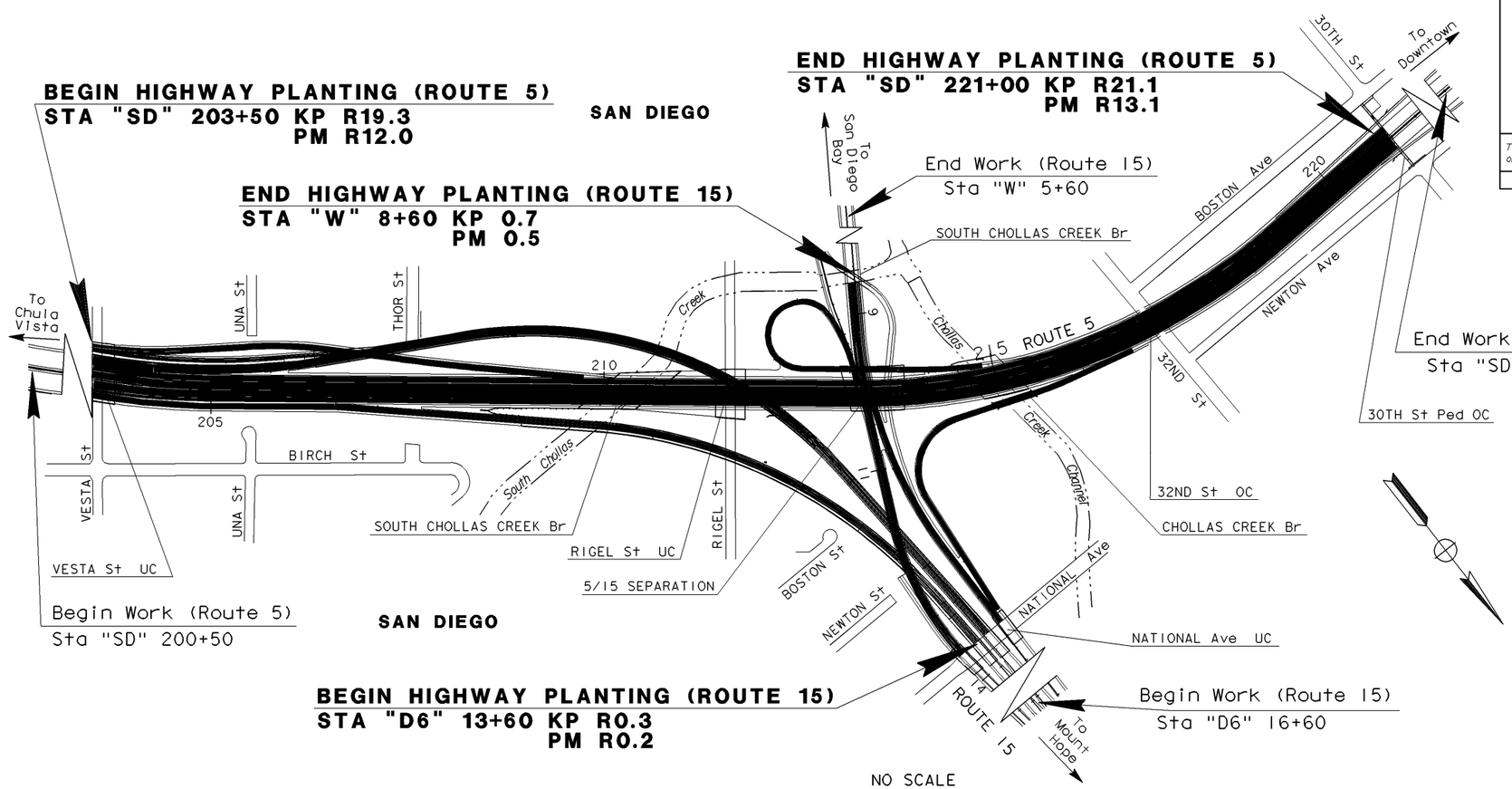

Licensed Landscape Architect

Plans Approval Date

LICENSED LANDSCAPE ARCHITECT — Name & License No. — Signature — Renewal Date — Date — STATE OF CALIFORNIA

TITLE SHEET, EXAMPLE "O" - HIGHWAY PLANTING PROJECT

(No highway construction involved. Project consist entirely of highway planting [landscape] work)
(See Example "F" for instructions on work and construction limits on Route 15)

The Contractor shall possess the Class (or Classes) of license as specified in the ''Notice to Contractors''.

PROJECT ENGINEER | DATE | PROJECT MANAGER | DATE

LAST REVISION 04-02-01 | DATE PLOTTED => 10-APR-2001 | TIME PLOTTED => 08:59

Contract No. 11-071004

FOR REDUCED PLANS ORIGINAL SCALE IS IN MILLIMETERS 0 20 40 60 80

USERNAME => trmikesl
DGN FILE => dpm2_056.dgn

CU 11000 | EA 071001

Return to Section 2 Table of Contents, page 2-37

INDEX OF SHEETS

DIST	COUNTY	ROUTE	KILOMETER POST TOTAL PROJECT	SHEET No	TOTAL SHEETS
11	Imp	111	47.3		

STATE OF CALIFORNIA

DEPARTMENT OF TRANSPORTATION

PROJECT PLANS FOR BUILDING CONSTRUCTION ADJACENT TO

STATE HIGHWAY

IN IMPERIAL COUNTY
ABOUT 3.9 km SOUTH OF CALIPATRIA
AT THE TWO RIVERS SAFETY ROADSIDE REST AREA

To be supplemented by Standard Plans dated _____

This reference to the Standard Plans is only to be made when the contract is to be administered under the Standard Specifications

LOCATION MAP

The State of California or its officers or agents shall not be responsible for the accuracy or completeness of electronic copies of this plan sheet.

Caltrans now has a web site! To get to the web site, go to: http://www.dot.ca.gov

Caltrans Metric

LOCATION OF CONSTRUCTION
KP 47.3
PM 29.4

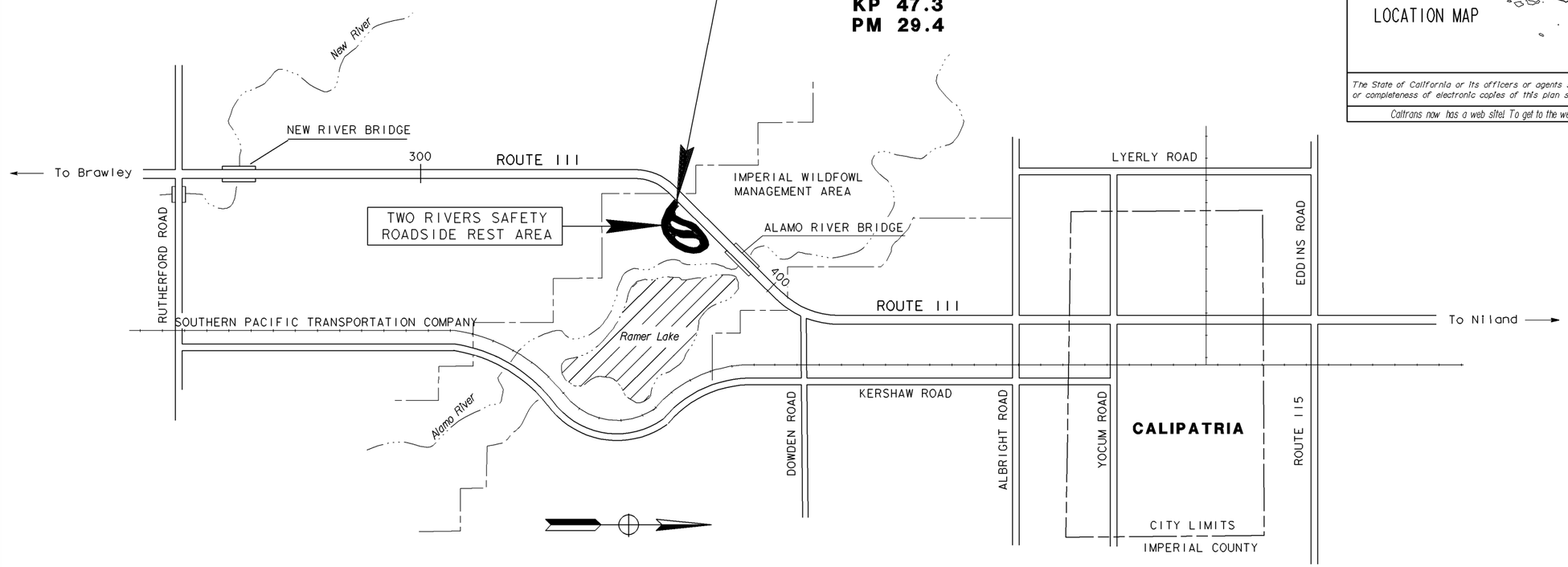

NO SCALE

Licensed Architect

Plans Approval Date

LICENSED ARCHITECT — No. — Exp. — STATE OF CALIFORNIA

The Contractor shall possess the Class (or Classes) of license as specified in the ''Notice to Contractors''.

TITLE SHEET, EXAMPLE "P" - BUILDING WORK
(Rural adjacent to State Highway)

PROJECT ENGINEER | DATE | PROJECT MANAGER | DATE

LAST REVISION 04-02-01 | DATE PLOTTED => 10-APR-2001 | TIME PLOTTED => 08:59

Contract No. **11-199714**

FOR REDUCED PLANS ORIGINAL SCALE IS IN MILLIMETERS 0 20 40 60 80

USERNAME => trmikesl
DGN FILE => dpm2_057.dgn

CU 11000 | EA 199711

Return to Section 2 Table of Contents, page 2-37

INDEX OF SHEETS

DIST	COUNTY	ROUTE	KILOMETER POST TOTAL PROJECT	SHEET NO	TOTAL SHEETS
03	Yub	5506			

STATE OF CALIFORNIA

DEPARTMENT OF TRANSPORTATION

PROJECT PLANS FOR BUILDING CONSTRUCTION

IN YUBA COUNTY
IN MARYSVILLE
AT THE DISTRICT OFFICE
AT 703 B STREET

No KP is to be used due to this project not being on State Highway

To be supplemented by Standard Plans dated _____

This reference to the Standard Plans is only to be made when the contract is to be administered under the Standard Specifications

The State of California or its officers or agents shall not be responsible for the accuracy or completeness of electronic copies of this plan sheet.

Caltrans now has a web site! To get to the web site, go to: http://www.dot.ca.gov

Caltrans Metric

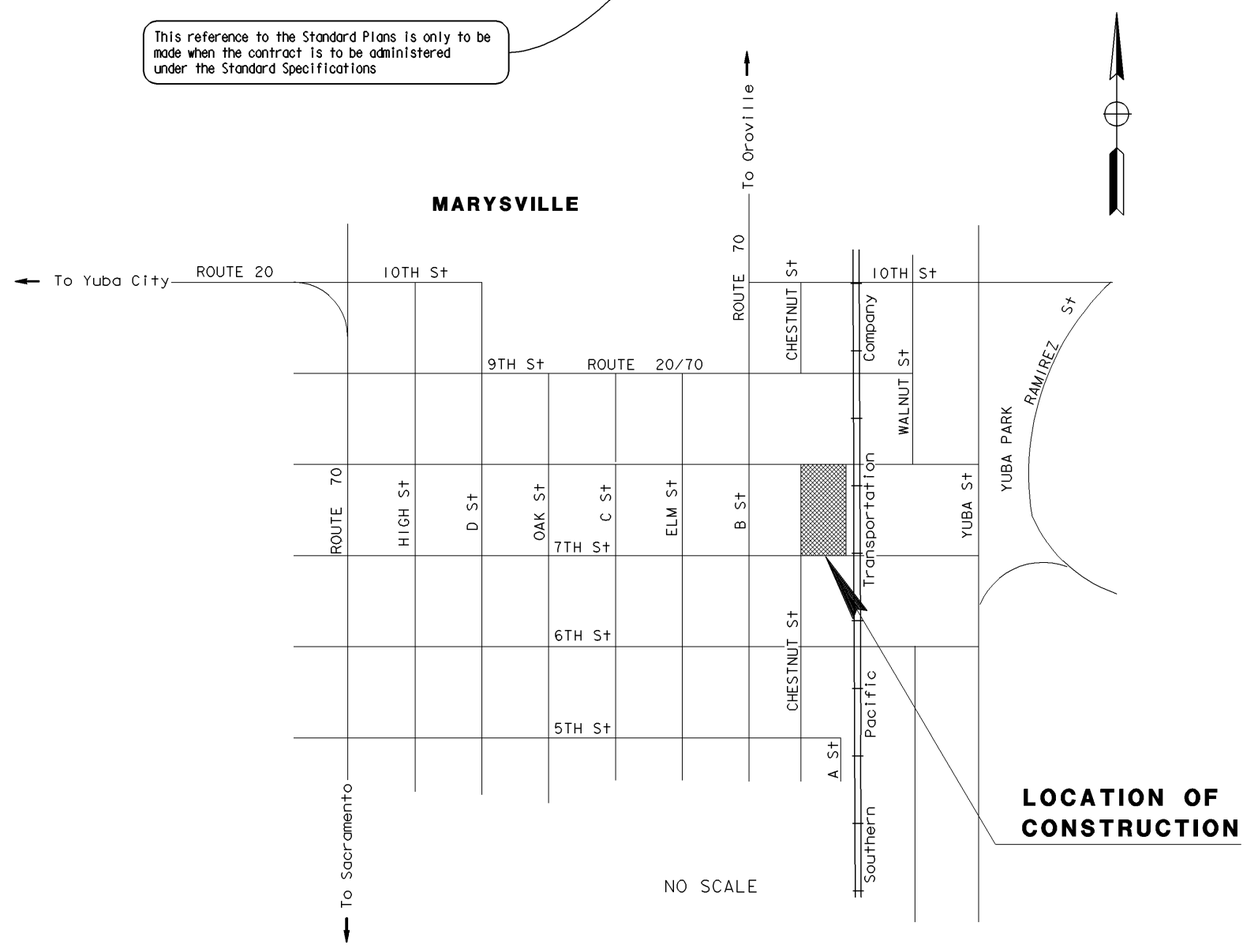

Project Engineer Date
Registered Civil Engineer

Plans Approval Date

REGISTERED PROFESSIONAL ENGINEER
No.
Exp.
CIVIL
STATE OF CALIFORNIA

The Contractor shall possess the Class (or Classes) of license as specified in the ''Notice to Contractors''.

TITLE SHEET, EXAMPLE "Q" - BUILDING CONSTRUCTION
(City or Urban Location off of State Highway)

PROJECT ENGINEER	DATE	PROJECT MANAGER	DATE

LAST REVISION 04-02-01
DATE PLOTTED => 10-APR-2001
TIME PLOTTED => 08:59

Contract No. **03-185214**

FOR REDUCED PLANS ORIGINAL SCALE IS IN MILLIMETERS 0 20 40 60 80

USERNAME => trmikesl
DGN FILE => dpm2_058.dgn

CU 03000 EA 185211

Return to Section 2 Table of Contents, page 2-37

2-2.2 Typical Cross Sections

This sheet shows the structural elements of the roadway. It should not contain information concerning geometric elements, which are adequately shown on layout sheets. Typical cross sections shall be a graphic representation of the work to be performed. When the project consists of only a few sheets of plans, typical cross sections may be shown on the layout sheet.

The statements, "Dimensions of the structural sections are subject to tolerances specified in the Standard Specifications", and "Superelevation as shown or as directed by the Engineer", must appear on the first sheet of typical cross sections. Textural symbols shall not be used on the typical cross sections. Existing sections shall be shown as dashed lines.

In most circumstances, the vertical scale of the sections should be exaggerated to clarify thickness of the various layers of the structural section. Thickness of the layers, within any one typical section, shall be shown proportionally. The vertical dimensions of the typical cross sections shall be expressed in millimeters. **Where a new structural section is to be constructed, the thickness of each layer shall be expressed to the nearest 5 mm.**

Horizontal roadway dimensions on the typical cross section shall be expressed in meters. Dimensions should be referenced to centerline or layout lines. Show the percent of slope or where applicable show as "match existing slope". If dimensions vary, give maximum and minimum values. Side slopes are to be identified as vertical to horizontal. Right-of-way lines are to be shown.

The design designation, as defined in the Highway Design Manual Section 103.1, shall be shown on the typical cross section for all new highway construction projects and rehabilitation projects. See "Typical Cross Section - Example A" for an example of how to express the design designation.

Where Pavement Reinforcing Fabric (PRF) is included as part of the structural section, show the limits of the PRF.

Where curb or dikes are shown, identify types used.

When there are multiple typical cross sections to be shown on the typical cross section sheet(s), the section with the lowest stationing is shown on the bottom of the sheet and the sections are to advance in greater stationing as you go up the sheet. Stationing is to be shown to the thousandths of a station. Stationing on multiple typical cross sections shall not overlap.

Structural section designation numbers, if used, are to be consistent with those shown on the layout sheets of the plans.

Where new surfacing is to be placed on existing pavement, the bottom of the new surfacing which is to be in contact with existing pavement shall be shown as a solid line.

Where existing pavement is shown to be removed, the type of material and thickness of the existing structural section layers shall be identified. **Where the existing structural section was previously shown in imperial units, the thickness of each layer shall be soft converted and expressed to the nearest millimeter.**

TYPICAL CROSS SECTION CHECK LIST

- ☐ District, County and Route (upper right corner)
- ☐ Kilometer Post and Sheet Numbers (upper right corner)
- ☐ Design Designation (useful for future reference) - Show on first sheet only
- ☐ Legend and Abbreviation (do not repeat standard plans abbreviations and symbols)
- ☐ Scales (or labeled "NO SCALE")
- ☐ Layout Line (centerline, station line, etc.)
- ☐ Profile Grade Point, Widths of Pavement, Shoulders, Medians, Sidewalk, Gutter, Ditches, Etc. - Indicates limits of variable dimensions
- ☐ Cross Slope (percent)
- ☐ Cross Slopes, Median, and Gutter Cross Slopes
- ☐ Slope Rounding
- ☐ Benching and Strutting (where applicable)
- ☐ Basic Right of Way Widths
- ☐ Stationing Limits below each section, sections with smallest Stationing Limits at bottom of sheet with increasing Station Sections stacked above, and Pavement Width Transitions shown where required
- ☐ Type, Class and Thickness of Pavement, Base and Subbase
- ☐ Seal Coats, Except Fog Seals
- ☐ AC Dike with Type Identification
- ☐ Edge Drains (where applicable) - Add details if different from standard plans
- ☐ Curb and Gutter Types (include dimensions not shown on Standard Plans)
- ☐ Pertinent Existing Features, Including Existing Structural Section
- ☐ The following notes shall be shown on the first sheet of the typical cross sections:
  1.) "Dimensions of the structural sections are subject to tolerances specified in the Standard Specifications".
  2.) "Superelevation as shown or as directed by the Engineer".
- ☐ CU No. and EA No. (lower right corner)
- ☐ Signature, Date of Signature and Registration Seal information completed, (upper right corner)

Return to Section 2 Table of Contents

NOTES:

1. DIMENSIONS OF THE STRUCTURAL SECTIONS ARE SUBJECT TO TOLERANCES SPECIFIED IN THE STANDARD SPECIFICATIONS.
2. SUPERELEVATION AS SHOWN OR AS DIRECTED BY THE ENGINEER.
3. TYPICAL SECTIONS FOR DETOURS ARE SHOWN ON DETOUR SHEETS.

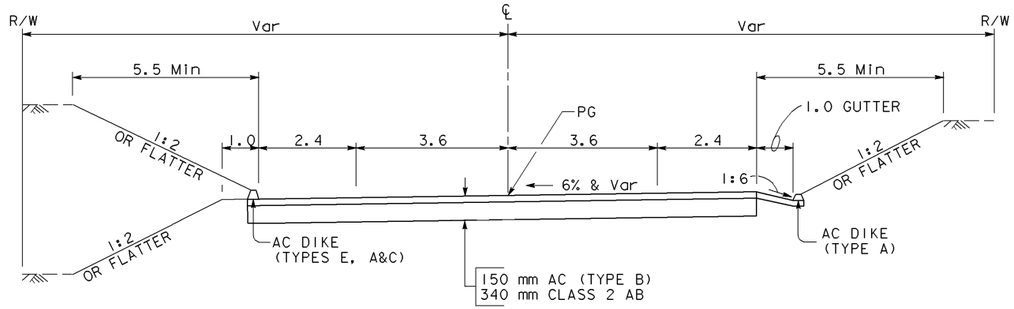

ROUTE 48

STA 120+85 TO 126+00 *5.5 m
STA 128+15 TO 128+75 *1.5 m

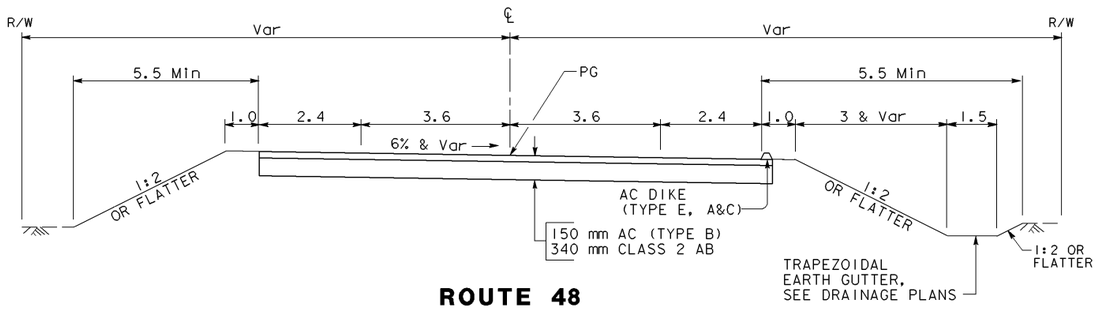

ROUTE 48

STA 112+00 TO 118+50

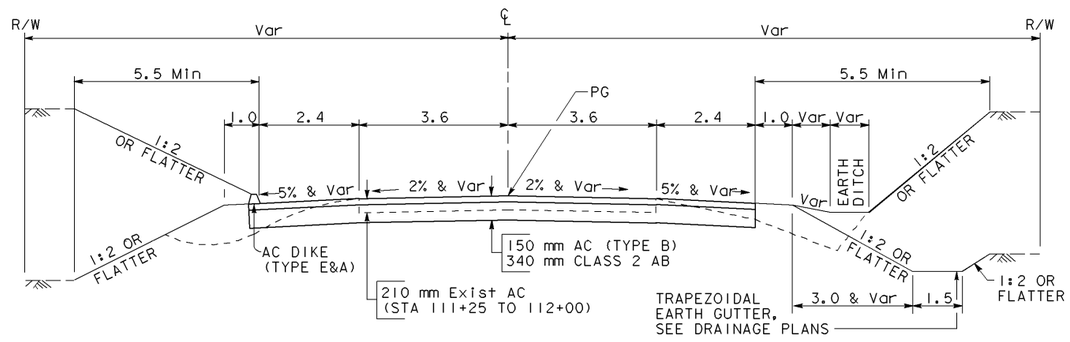

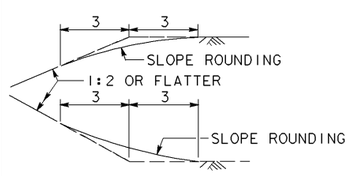

SLOPE ROUNDING DETAIL (TYPICAL)

ROUTE 48

STA 111+25 TO 112+00 *2.4 m
STA 118+50 TO 120+85 *5.5 m
STA 128+75 TO 129+50 *1.5 m

Titles
Sub-Titles

Text for all individual plan sheets.
Detail Sub-Titles: FT=2, WT=2, TX=2.2
Detail Titles: FT=43, WT=0, TX=3.0

DESIGN DESIGNATION (ROUTE 48)

2001 ADT = 14,500 D = 55%
2021 ADT = 32,400 T = 6%
DHV = 3,200 V = 70 MPH

The values shown above may not be exact for this route, but are included as a representative sample of how to show the design designation info on the typical cross sections sheet. The design designation is to be shown on the typical cross section sheet for those projects defined in the Highway Design Manual Section 103.1.

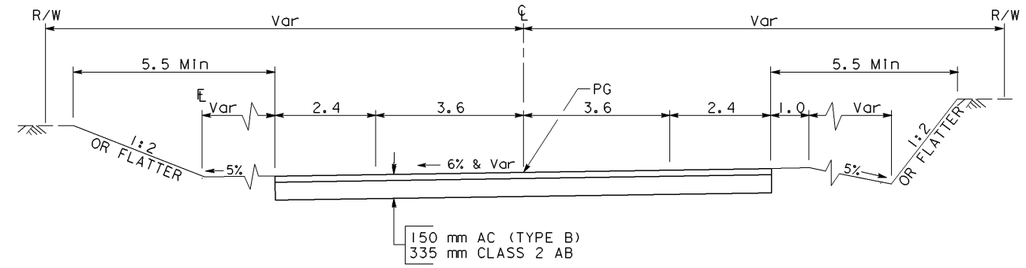

ROUTE 48

STA 126+00 TO 128+15

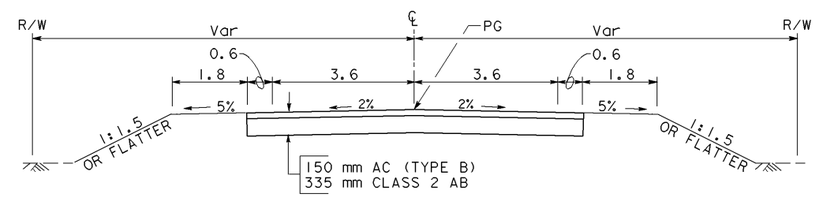

WEST INTERSECTION

STA 10+00 TO 11+80

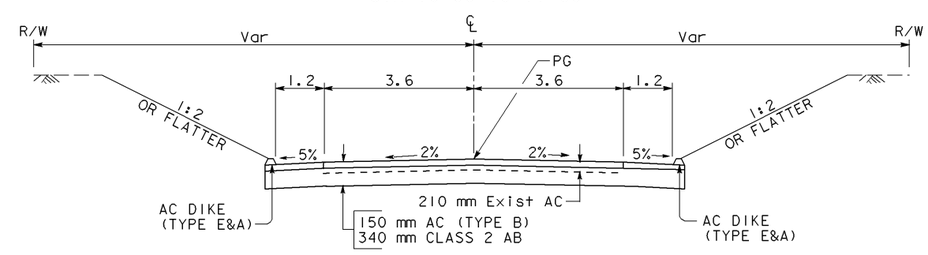

EAST INTERSECTION

STA 434+60 TO 436+07.937

Sheet Title information (lower right corner).
Main Title: FT=43, WT=0, TX=3.7,
(If space is limited, reduce text size to 3.0),
Sheet Code: FT=43, WT=0, TX=3.7
"NO SCALE" Text: FT=2, WT=2, TX=2.2,
"Metric Note" Text: FT=2, WT=1, TX=1.8

ALL DIMENSIONS ARE IN METERS UNLESS OTHERWISE SHOWN

TYPICAL CROSS SECTIONS SHEET - EXAMPLE "A"
NEW STRUCTURAL SECTION ON NEW ALIGNMENT

TYPICAL CROSS SECTIONS

NO SCALE

X-1

DIST	COUNTY	ROUTE	KILOMETER POST TOTAL PROJECT	SHEET No	TOTAL SHEETS

REGISTERED CIVIL ENGINEER

PLANS APPROVAL DATE

REGISTERED PROFESSIONAL ENGINEER No. Exp. CIVIL STATE OF CALIFORNIA

The State of California or its officers or agents shall not be responsible for the accuracy or completeness of electronic copies of this plan sheet.

Caltrans now has a web site! To get to the web site, go to: http://www.dot.ca.gov

Caltrans Metric

DATE	REVISED BY	DATE REVISED

CALCULATED/DESIGNED BY | CHECKED BY | PROJECT ENGINEER

STATE OF CALIFORNIA - DEPARTMENT OF TRANSPORTATION
Caltrans DESIGN

LAST REVISION 04-02-01 | DATE PLOTTED => 10-APR-2001 TIME PLOTTED => 08:59

FOR REDUCED PLANS ORIGINAL SCALE IS IN MILLIMETERS 0 20 40 60 80

USERNAME => trmikesl
DGN FILE => dpm2_061.dgn

CU 00000 | EA 000000

Return to Section 2 Table of Contents, page 2-59

NOTES:

1. DIMENSIONS OF THE STRUCTURAL SECTIONS ARE SUBJECT TO TOLERANCES SPECIFIED IN THE STANDARD SPECIFICATIONS.
2. SUPERELEVATION AS SHOWN OR AS DIRECTED BY THE ENGINEER.

DESIGN DESIGNATION (ROUTE 66)

2001 ADT = 14,500 D = 55%
2021 ADT = 32,400 T = 6%
DHV = 3,200 V = 70 MPH

The values shown above may not be exact for this route, but are included as a representative sample of how to show the design designation info on the typical cross sections sheet. The design designation is to be shown on the typical cross section sheet for those projects defined in the Highway Design Manual Section 103.1 .

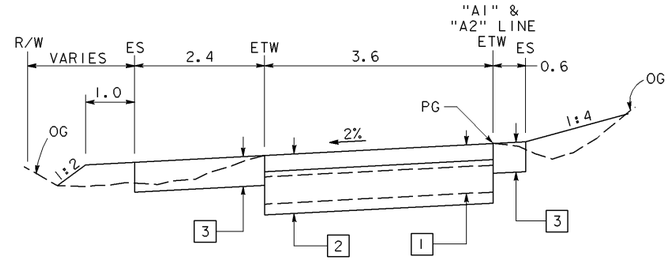

SOUTHBOUND HERITAGE AVE OFF-RAMP
STA "A1" 20+00.000 TO 21+15.894

SOUTHBOUND SONORA AVE ON-RAMP
STA "A2" 10+00.000 TO 12+68.568

TYPICAL STRUCTURAL SECTIONS

1 — EXIST
85 mm AC
102 mm AB

2 — 75 mm AC (TYPE B)
150 mm CLASS 3 AB

3 — 110 mm AC (TYPE B)

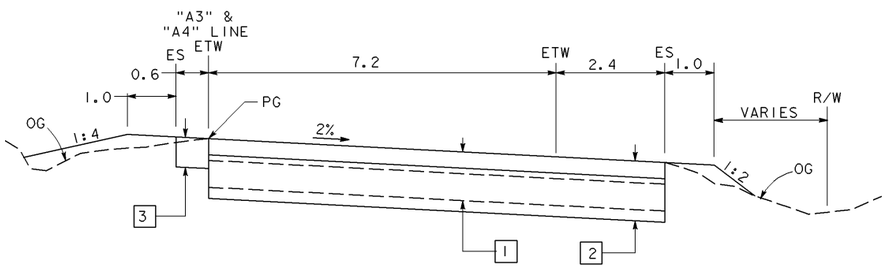

NORTHBOUND HILL TREE AVE OFF-RAMP
STA "A3" 20+00.000 TO 22+02.541

NORTHBOUND PLACID AVE ON-RAMP
STA "A4" 10+00.000 TO 12+53.887

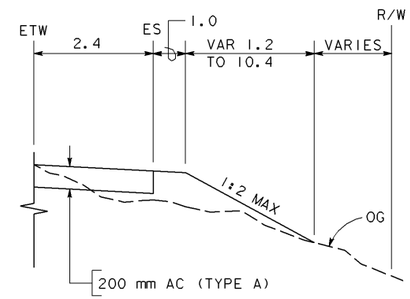

STA 10+00.000 TO 11+15.847
STA 13+84.121 TO 14+22.793

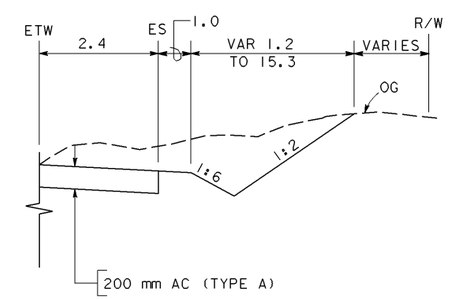

STA 11+15.847 TO 13+84.121
STA 14+22.793 TO 16+08.457

NORTHBOUND SHOULDER DETAILS

ROUTE 66

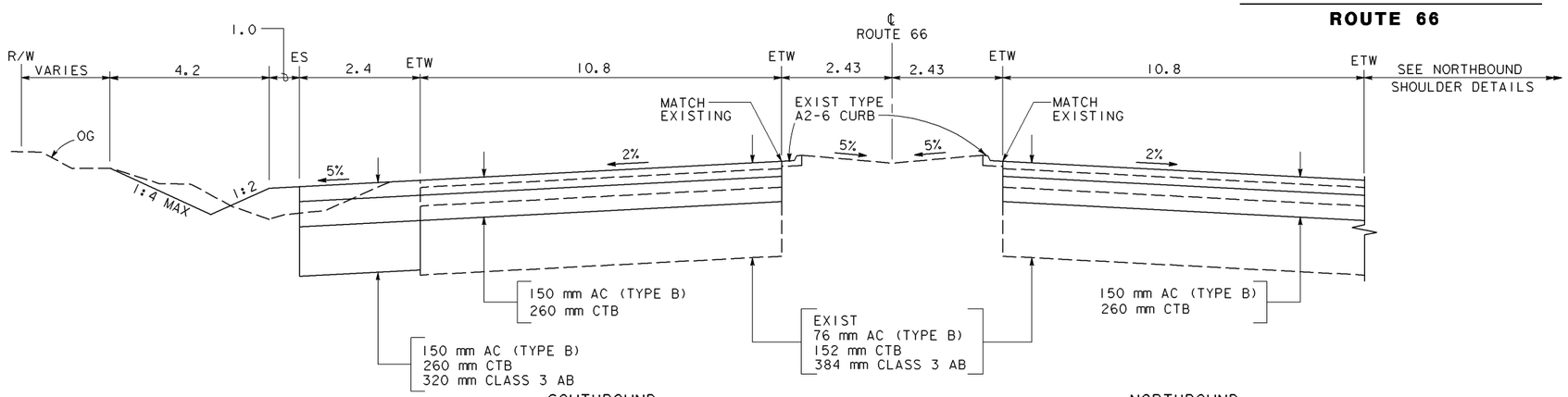

ROUTE 66
STA 10+00.000 TO 16+08.457

TYPICAL CROSS SECTIONS SHEET - EXAMPLE "B"
RECONSTRUCT FREEWAY AND RAMPS

ALL DIMENSIONS ARE IN
METERS UNLESS OTHERWISE SHOWN

TYPICAL CROSS SECTIONS

NO SCALE

X-1

DIST	COUNTY	ROUTE	KILOMETER POST TOTAL PROJECT	SHEET No	TOTAL SHEETS

REGISTERED CIVIL ENGINEER

PLANS APPROVAL DATE

REGISTERED PROFESSIONAL ENGINEER No. Exp. CIVIL STATE OF CALIFORNIA

The State of California or its officers or agents shall not be responsible for the accuracy or completeness of electronic copies of this plan sheet.

Caltrans now has a web site! To get to the web site, go to: http://www.dot.ca.gov

Caltrans Metric

DATE	REVISED BY	DATE REVISED

CALCULATED/DESIGNED BY
CHECKED BY

PROJECT ENGINEER

STATE OF CALIFORNIA - DEPARTMENT OF TRANSPORTATION
Caltrans
DESIGN

LAST REVISION 04-02-01
DATE PLOTTED => 10-APR-2001
TIME PLOTTED => 08:59

Return to Section 2 Table of Contents

NOTES:

1. DIMENSIONS OF THE STRUCTURAL SECTIONS ARE SUBJECT TO TOLERANCES SPECIFIED IN THE STANDARD SPECIFICATIONS.
2. SUPERELEVATION AS SHOWN OR AS DIRECTED BY THE ENGINEER.

Caltrans Metric

DIST	COUNTY	ROUTE	KILOMETER POST TOTAL PROJECT	SHEET No	TOTAL SHEETS

REGISTERED CIVIL ENGINEER

PLANS APPROVAL DATE

REGISTERED PROFESSIONAL ENGINEER No. Exp. CIVIL STATE OF CALIFORNIA

The State of California or its officers or agents shall not be responsible for the accuracy or completeness of electronic copies of this plan sheet.

Caltrans now has a web site! To get to the web site, go to: http://www.dot.ca.gov

DESIGN DESIGNATION (ROUTE 99)

2001 ADT = 14,500 D = 55%
2021 ADT = 32,400 T = 6%
DHV = 3,200 V = 70 MPH

The values shown above may not be exact for this route, but are included as a representative sample of how to show the design designation info on the typical cross sections sheet. The design designation is to be shown on the typical cross section sheet for those projects defined in the Highway Design Manual Section 103.1 .

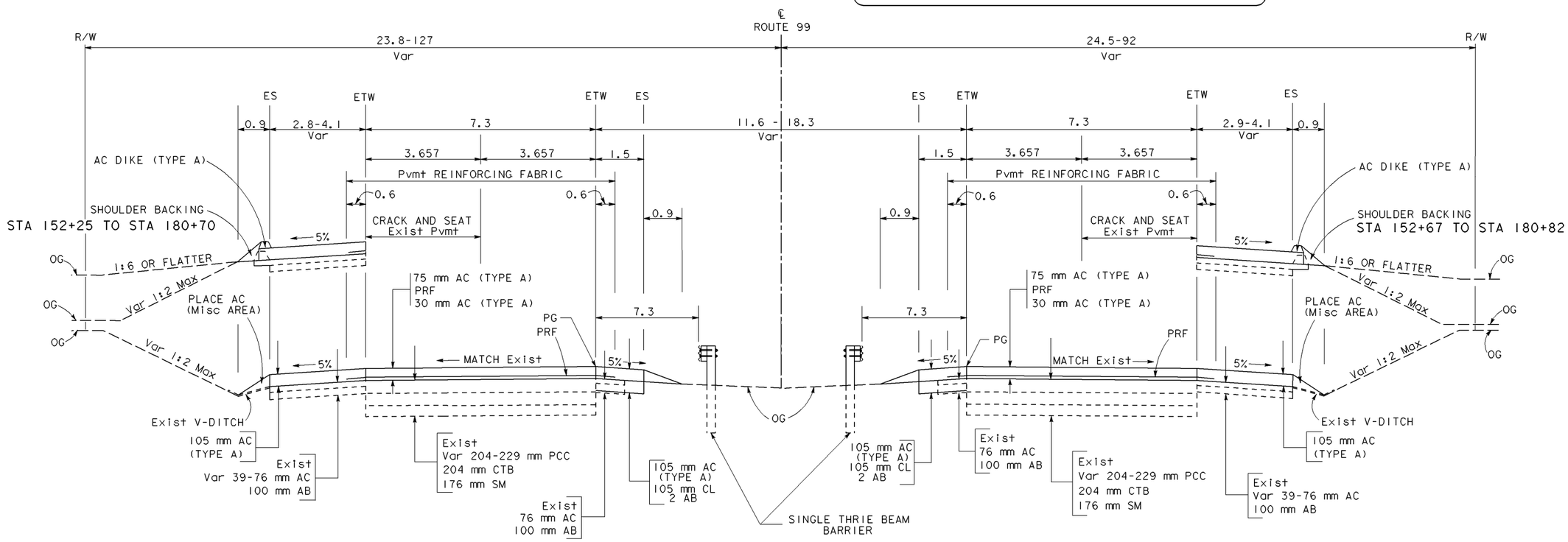

SOUTHBOUND
STA 151+98 TO STA 202+41

ROUTE 99

NORTHBOUND
STA 151+98 TO STA 202+41

TYPICAL CROSS SECTIONS SHEET - EXAMPLE "C"
PAVEMENT REHABILITATION

ALL DIMENSIONS ARE IN
METERS UNLESS OTHERWISE SHOWN

TYPICAL CROSS SECTIONS

NO SCALE

X-1

DATE	REVISED BY	DATE REVISED

CALCULATED/DESIGNED BY
CHECKED BY
PROJECT ENGINEER

STATE OF CALIFORNIA - DEPARTMENT OF TRANSPORTATION
Caltrans **DESIGN**

LAST REVISION 04-02-01
DATE PLOTTED => 10-APR-2001
TIME PLOTTED => 09:00

FOR REDUCED PLANS ORIGINAL SCALE IS IN MILLIMETERS 0 20 40 60 80

USERNAME => trmikesl
DGN FILE => dpm2_063.dgn

CU 00000 EA 000000

Return to Section 2 Table of Contents

DIST	COUNTY	ROUTE	KILOMETER POST TOTAL PROJECT	SHEET No	TOTAL SHEETS

REGISTERED CIVIL ENGINEER

PLANS APPROVAL DATE

REGISTERED PROFESSIONAL ENGINEER No. Exp. CIVIL STATE OF CALIFORNIA

The State of California or its officers or agents shall not be responsible for the accuracy or completeness of electronic copies of this plan sheet.

Caltrans now has a web site! To get to the web site, go to: http://www.dot.ca.gov

Caltrans Metric

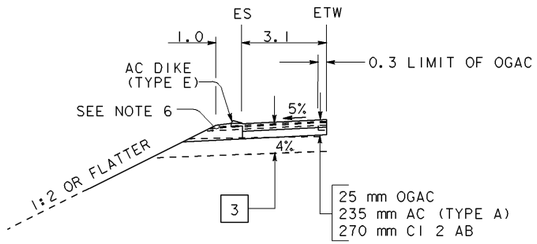

STA "A" 174+36.47 TO 174+59.56

See Typical Cross Sections Sheet - Example "A" for information regarding design designation data to be shown.

NOTES:

1. DIMENSIONS OF THE STRUCTURAL SECTIONS ARE SUBJECT TO TOLERANCES SPECIFIED IN THE STANDARD SPECIFICATIONS.
2. SUPERELEVATION AS SHOWN OR AS DIRECTED BY THE ENGINEER.
3. FOR BARRIER LOCATION, SEE LAYOUT SHEETS.
4. 3.8% BETWEEN STA "A" 179+96 TO 182+71.
5. VARIES 3.8% TO -5% STA "A" 182+71 TO 183+40.
6. IMPORTED MATERIAL (SHOULDER BACKING).

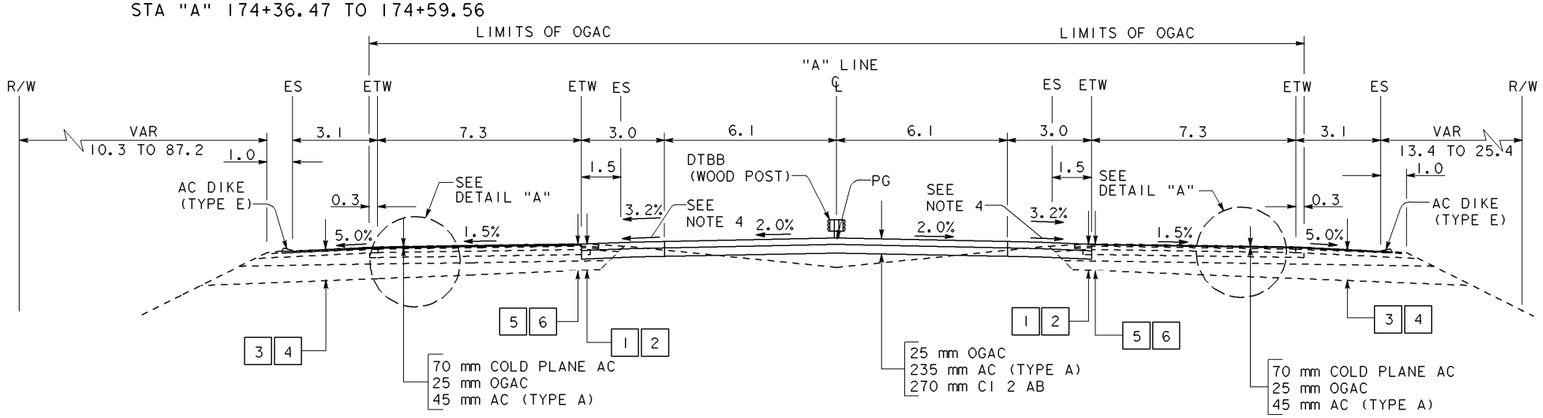

STA "A" 172+90 TO 174+59.56
STA "A" 179+96 TO 182+71

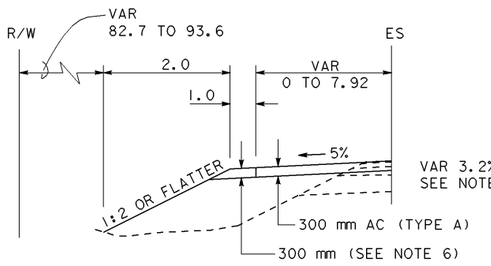

MAINTENANCE VEHICLE PULLOUT
STA "A" 171+56 TO 172+10

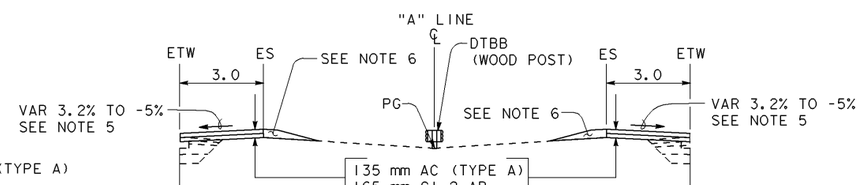

STA "A" 172+40 TO 172+90

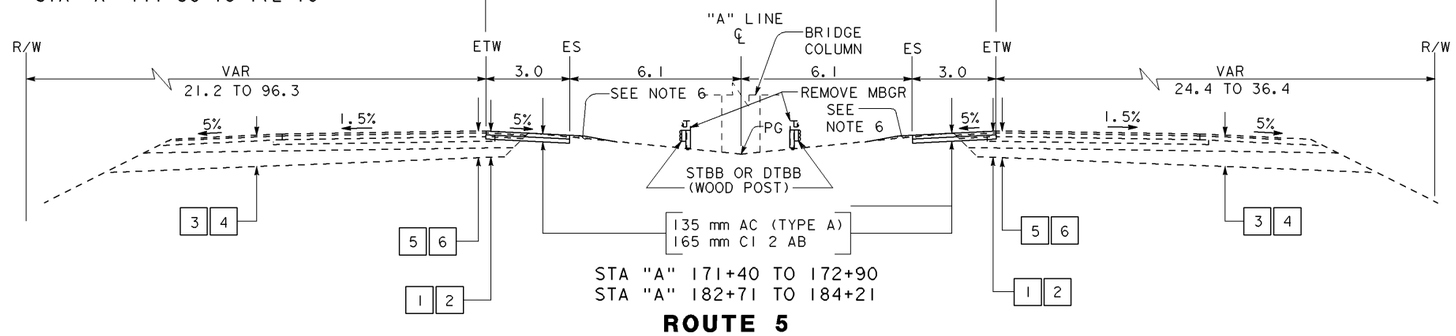

STA "A" 171+40 TO 172+90
STA "A" 182+71 TO 184+21

ROUTE 5

STRUCTURAL SECTION NOTES:

1 EXIST INSIDE SHOULDER SECTION FROM 171+40 TO 176+03.66

76 mm AC
128 mm AB
152 mm CI 1 AS
152 mm CI 2 AS

2 EXIST INSIDE SHOULDER SECTION FROM 178+15.98 TO 184+21

61 mm AC
143 mm AB
152 mm AS

3 EXIST OUTSIDE SHOULDER SECTION FROM 171+40 TO 176+03.66

76 mm AC
128 mm AB
152 mm CI 1 AS
450 mm CI 2 AS

4 EXIST OUTSIDE SHOULDER SECTION FROM 178+15.98 TO 184+21

76 mm AC
128 mm AB
450 mm AS

5 EXIST TRAVELED WAY SECTION FROM 171+40 TO 176+03.66

105 mm AC
204 mm PCC
100 mm RMCTB
152 mm CI 1 AS
300 mm CI 2 AS

6 EXIST TRAVELED WAY SECTION FROM 178+15.98 TO 184+21

105 mm AC
204 mm PCC
105 mm RMCTB
300 mm AS

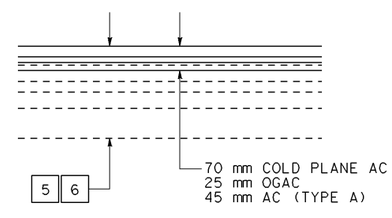

DETAIL "A"

ALL DIMENSIONS ARE IN METERS
UNLESS OTHERWISE SHOWN

TYPICAL CROSS SECTIONS
NO SCALE

X-1

TYPICAL CROSS SECTIONS SHEET - EXAMPLE "D"
PAVEMENT WIDENING AND RESURFACING

REVISED BY | DATE REVISED | DATE | CALCULATED/DESIGNED BY | CHECKED BY | PROJECT ENGINEER

STATE OF CALIFORNIA - DEPARTMENT OF TRANSPORTATION
Caltrans **DESIGN**

10-APR-2001 dpm2_064.dgn 09:00

LAST REVISION 04-02-01 | DATE PLOTTED => 10-APR-2001 | TIME PLOTTED => 09:00

FOR REDUCED PLANS ORIGINAL SCALE IS IN MILLIMETERS 0 20 40 60 80

USERNAME => trmikesl
DGN FILE => dpm2_064.dgn

CU 00000 | EA 000000

Return to Section 2 Table of Contents

DIST	COUNTY	ROUTE	KILOMETER POST TOTAL PROJECT	SHEET No	TOTAL SHEETS

REGISTERED CIVIL ENGINEER

PLANS APPROVAL DATE

REGISTERED PROFESSIONAL ENGINEER No. Exp. CIVIL STATE OF CALIFORNIA

The State of California or its officers or agents shall not be responsible for the accuracy or completeness of electronic copies of this plan sheet.

Caltrans now has a web site! To get to the web site, go to: http://www.dot.ca.gov

Caltrans Metric

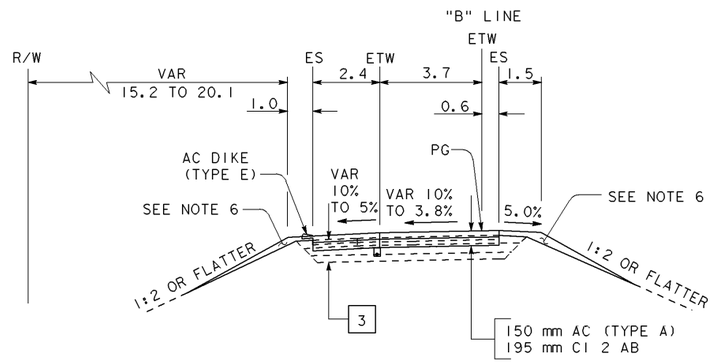

RIVERSIDE OFF-RAMP
STA "B" 173+53.29 TO 174+86.37

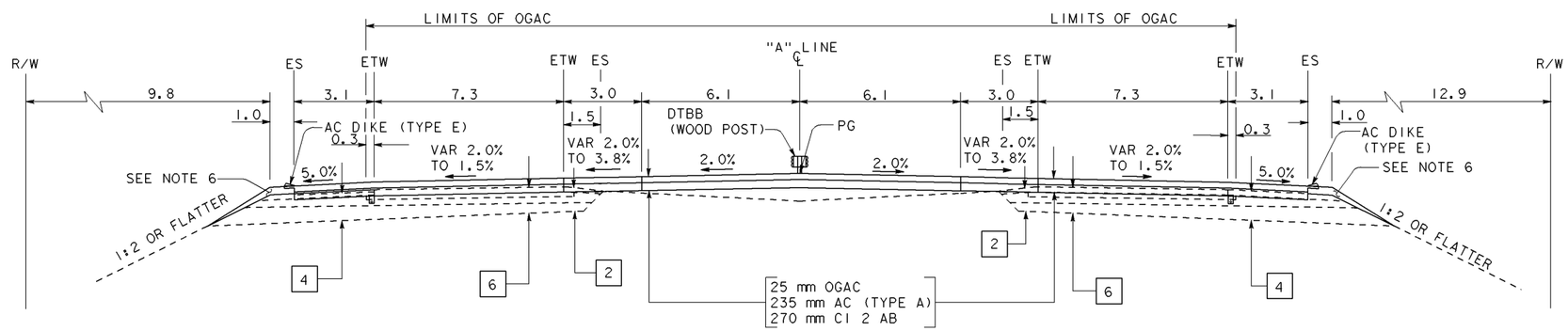

STA "A" 179+69 TO 179+96

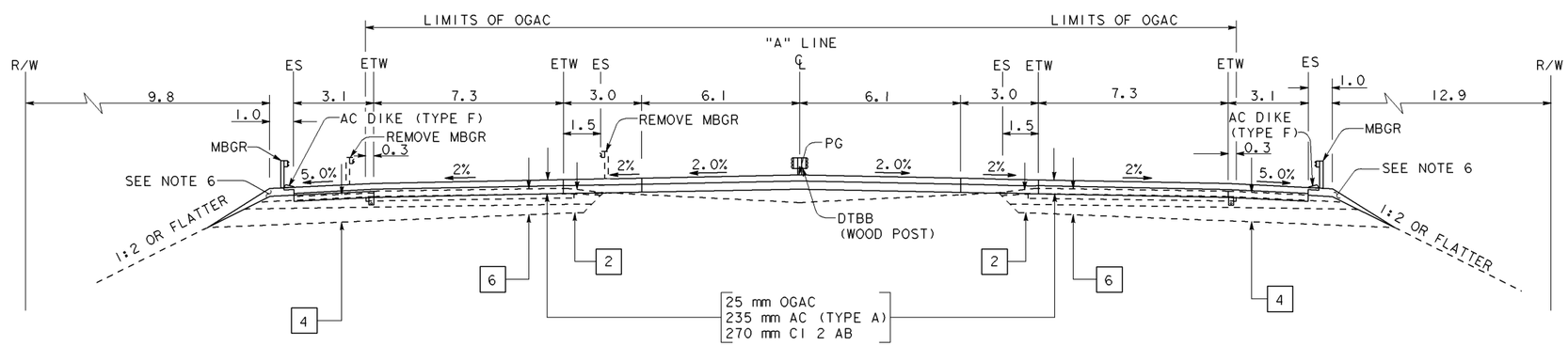

STA "A" 178+03.75 to 179+69

ROUTE 5

TYPICAL CROSS SECTIONS SHEET - EXAMPLE "E"
PAVEMENT WIDENING AND RESURFACING

ALL DIMENSIONS ARE IN METERS
UNLESS OTHERWISE SHOWN

TYPICAL CROSS SECTIONS

NO SCALE

X-4

DATE	REVISED BY	DATE REVISED

CALCULATED/DESIGNED BY

CHECKED BY

PROJECT ENGINEER

STATE OF CALIFORNIA - DEPARTMENT OF TRANSPORTATION

DESIGN

Caltrans

10-APR-2001 dpm2_065.dgn 09:00

LAST REVISION 04-02-01

DATE PLOTTED => 10-APR-2001
TIME PLOTTED => 09:00

FOR REDUCED PLANS ORIGINAL SCALE IS IN MILLIMETERS 0 20 40 60 80

USERNAME => trmikesl
DGN FILE => dpm2_065.dgn

CU 00000 EA 000000

Return to Section 2 Table of Contents

Return to Section 2 Table of Contents

(Blank)

2-2.3 Key Map and Line Index

A key map and line index sheet may be required on large and complex projects. This sheet is an aid to clarify sheet locations and arrangements of centerlines. It is a small-scale graphic line diagram showing all construction layout lines, sheet arrangements, and centerlines. The same strip map used for the title sheet can be used. The scale can be adjusted to fit the sheet.

DIST	COUNTY	ROUTE	KILOMETER POST TOTAL PROJECT	SHEET No	TOTAL SHEETS

REGISTERED CIVIL ENGINEER

PLANS APPROVAL DATE

REGISTERED PROFESSIONAL ENGINEER No. Exp. CIVIL STATE OF CALIFORNIA

The State of California or its officers or agents shall not be responsible for the accuracy or completeness of electronic copies of this plan sheet.

Caltrans now has a web site! To get to the web site, go to: http://www.dot.ca.gov

Caltrans Metric

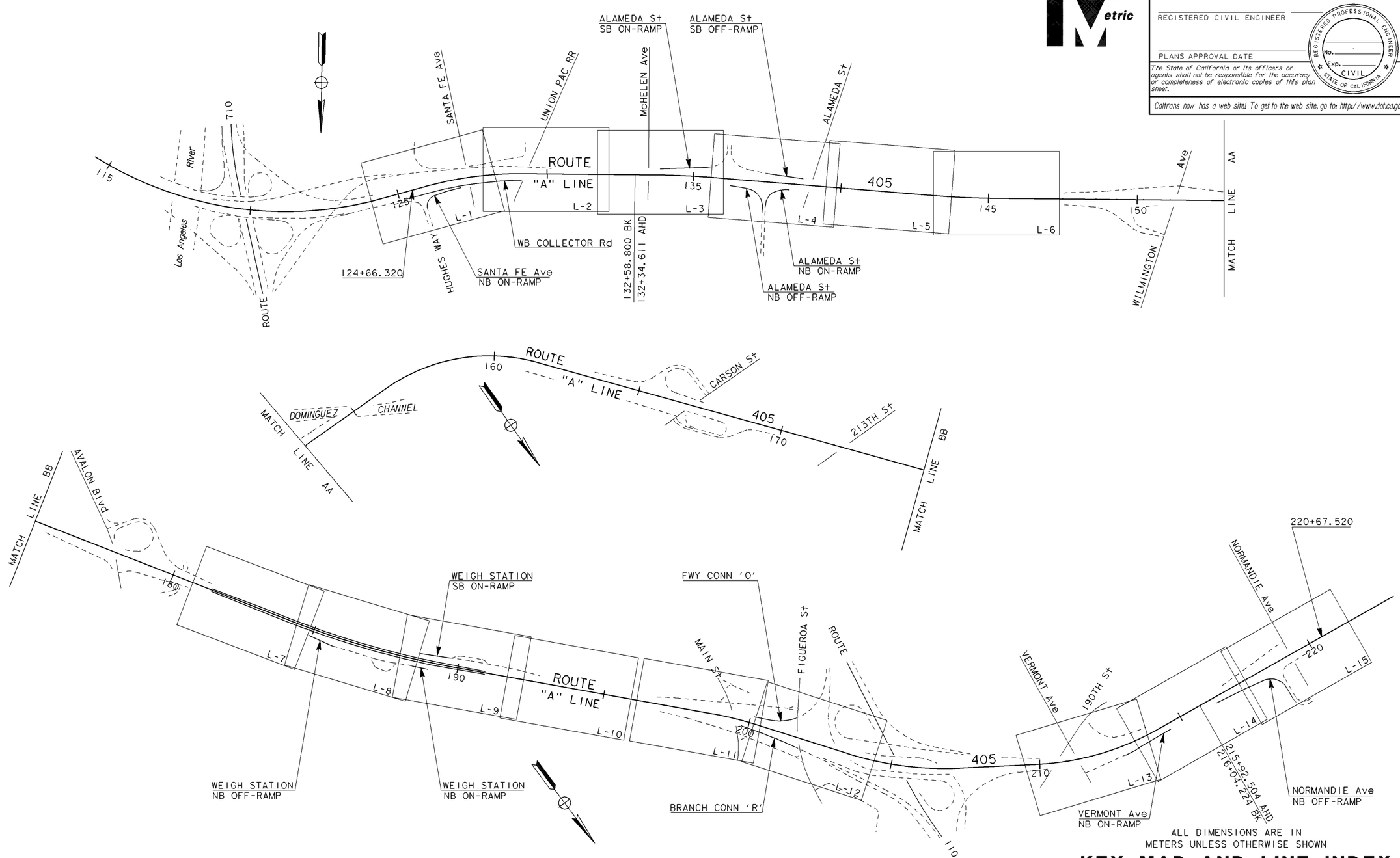

ALL DIMENSIONS ARE IN METERS UNLESS OTHERWISE SHOWN

KEY MAP AND LINE INDEX

NO SCALE

K-1

DATE	REVISED BY	DATE REVISED

CALCULATED/DESIGNED BY

CHECKED BY

PROJECT ENGINEER

STATE OF CALIFORNIA - DEPARTMENT OF TRANSPORTATION

Caltrans

DESIGN

LAST REVISION 04-02-01

DATE PLOTTED => 10-APR-2001
TIME PLOTTED => 09:00

FOR REDUCED PLANS ORIGINAL SCALE IS IN MILLIMETERS 0 20 40 60 80

USERNAME => trmikesl
DGN FILE => dpm2_069.dgn

CU 00000 EA 000000

Return to Section 2 Table of Contents

Return to Section 2 Table of Contents

(Blank)

2-2.4 Layouts, Profiles, and Superelevation Diagrams

(1) General

A layout sheet is defined as one of the following:

(a) Full Plan Sheet

(b) Combined Plan and Profile Sheet

(c) Combined Plan, Profile and Superelevation Diagram Sheet

Layouts shall contain general project data such as alignment, profiles, earthwork quantities and right of way lines and easements. Abbreviations and symbols used within the layouts shall be listed along with their meanings on the first layout sheet. Do not duplicate abbreviations shown on Standard Plan Sheet A10A. At interchange areas it may be necessary to show plan and profile on separate sheets. In metropolitan areas and at rural interchanges, separate full layout plan sheets may be necessary to show all the required data.

Where a full plan sheet is needed for plan layout, full profile sheets shall be used to show main line profiles and profiles of supplemental lines.

Where main line profiles appear on combined plan and profile sheets (layouts), full profile sheets shall be used to show profiles of supplemental lines, such as frontage roads, crossroads, ramps, ditches, channel changes and other roads which cannot be added conveniently to the profile portion of the combined plan and profile sheet (layout).

Rural highway plans are generally prepared to a scale of 1:1000 and urban areas to 1:500. The latter scale may be necessary in some rural areas. It is permissible to use both scales within a set of plans provided each sheet contains only one scale. Layout sheets shall be oriented to show mainline stationing progressing left to right. All alignment and profile stationing shall be shown in meters only.

Sheets shall be arranged to contain major construction features on one sheet. Wherever possible, the major portion of an interchange should appear on one sheet. This may necessitate breaks and match lines for the ends of minor road connections. Equations may cause profile plotting to control sheet arrangement. Where feasible, ramp and auxiliary road profiles should be complete on one sheet. Sheets should not end within a road intersection. The break should be such as to show the main features on one sheet. Diagonal placement is satisfactory to attain better coverage. Mainline stationing shall not overlap from one sheet to the other. Match lines shall be shown. References to adjoining sheets at the match lines, such as “See Sheet L-5”, are optional, but may be advisable where many match lines are shown on a sheet (such as sheets showing interchange areas, freeway to freeway connectors, etc.).

When alignment on layouts is such that “stacking” is necessary, the sheet shall be arranged so that the stationing shall read from the top half of the sheet to the bottom half of the sheet using match lines.

Attention is directed to Section 2-1.3 of this manual regarding metric plan dimensioning.

(2) Preparation Procedures

CADD permits the separation of drawing data by kind of data. The CADD system defines the various layers of similar data, or overlays as “levels”. Geographical drawings are created by combining levels of data from a master drawing. Refer to Section 2.4 of the CADD User’s Manual.

Existing topography may be provided by aerial photography, scanned maps, digitized maps, or maps from ground surveys. Topographic symbols are shown on Standard Plan A10B. Construction and cadastral symbols are shown on Standard Plan A10B.

Existing facilities shall be shown in dashed lines or dropout and proposed construction in solid lines.

Caltrans symbols and abbreviations shown in the Standard Plans and Caltrans CADD Cell Library shall be used.

Line work shall conform to the requirements in Section 1-2.1 of this manual. Lettering sizes shall conform to the requirements in Section 1-2.2 of this manual.

Return to Section 2 Table of Contents, page 2-29

(3) Plan Content

Only those existing topographic features which affect bidding, construction, and maintenance and which are essential for field orientation of the plans shall be shown. Confine topography to the portion within the right of way and a narrow band beyond. Include at least two coordinate grid ticks for orientation. In urban areas, topography generally need not be shown. However, any features pertinent to construction, such as streams, streets, curbs, gutters, and sidewalks involved in the construction, should be shown. In rural areas where little topography exists, all topography may be shown. Building and appurtenances within the right of way which will be removed prior to construction are not to be shown. Utilities which remain in place and utilities which are proposed to be relocated shall be shown unless separate utility plans are to be included as part of the project plans. (See Section 2-2.13 of this manual). High risk underground facilities shall be shown as provided in Section 2-2.13 of this manual.

Alignment data for all layout lines (mainlines, ramps, crossroads, frontage roads, relocated local streets, etc.) shall be shown. Stationing equations, distances and bearings of all tangents, stations of all curve points and curve data shall be shown.

Coordinate information for selected points (BC's, EC's, POC's) on the construction layout line at the beginning and end of project construction and within the curve data tables may be included on the plans. Inclusion of coordinate information on the plans is optional.

If coordinate information is included on the plans, it should generally be limited to no more than six coordinate values on any plan sheet. The addition of coordinate information shall not reduce the legibility or clarity of other design information on the plan sheet.

Where coordinate information is included on the plans, the statement, "Coordinate values shown are CCS _____ Zone _____" shall be included on the first layout sheet of the plans. The appropriate datum year of the California Coordinate System (CCS) and applicable Zone number are to be included. The CCS datum year is shown as "CCS27" for the North American Datum of 1927 or "CCS83" for the North American Datum of 1983. The applicable Zone numbers are 1 through 7 for "CCS27" and 1 through 6 for "CCS83".

Show and label right of way lines, easement lines, right of entry. Show and label township and section lines and corners, recorded subdivisions, Spanish grants, swamp land and tideland surveys, and state, county, and city lines.

The layout plan shall show edge of traveled way, edge of pavement, edge of shoulders, curbs, sidewalks, all drainage structures unless separate Drainage Plans are to be included as part of the plans, survey monuments to be set (if not shown on the Summary of Quantities Sheets), fences, guard railing, barriers, and all other facilities to be constructed. Solid lines are to be used for proposed construction items. Indicate what work is to be performed on existing facilities, such as "Abandon" or "Remove". The words "Construct", "Place", etc., for new construction are superfluous. Necessary dimensions are to be included. The toe of fill and top of cut slopes are to be shown except where grading is very light.

See Section 2-2.13 of this manual concerning showing utilities on the project plans. Where extensive or complex utility systems are to be shown, separate sheets of utility plans and details shall be included in the project plans.

(4) Profile Content

Data shown on the Full Profile Sheet or the lower half of the combined Plan and Profile Sheet can usually be reproduced directly from the preliminary profile. The most common vertical scales are:

(a) 1:100 -- Rural sections in hilly and mountainous terrain with considerable rise and fall.

(b) 1:50 -- Rural or urban areas with gently rolling terrain with less than two percent general ground slope.

(c) 1:20 -- Rural or urban areas in level terrain where precise grade and gutter design is required.

Vertical to horizontal scale ratios producing profile grade line plots steeper than 1:1 should be avoided, Scale ratio of H/V = 10 is most commonly used. See Table 2-1.3A for most common H/V scales.

The datum elevations should be placed on top of the horizontal grid line they represent at both ends of the profile line. Placing datum elevations from top to bottom of the sheet is not necessary. Only a few elevations are needed in the immediate vicinity of the profile line.

Bench mark data (bench number, description, and location in relation to the layout line) is to be included with the profile information. Inclusion of bench mark elevations is optional. Where bench mark elevations are shown on the plans, the basis of the vertical datum is to be shown on the first sheet of profiles using the statement, "Elevation is based on _____ Datum". The current vertical datum used by Caltrans is the "National Geodetic Vertical Datum of 1929". If this is the vertical datum used, the blank space in the statement would be shown as "1929 National Geodetic Vertical".

The original groundline shall be checked for obvious errors in plotting and missing break points at ditches, levees, etc.

The original groundline and profile grade line should not crowd the top or bottom of the sheet.

On combined Plan and Profile Sheets the profile stationing shall match the stationing as shown in the plan portion.

On Full Profile Sheets the horizontal scale need not correspond to the plan scale.

Where profiles are "stacked" on Full Profile Sheets, they shall be arranged so that stationing progresses from the top half of the sheet to the bottom half of the sheet.

Profile stationing shall not overlap. Equation stations may control coverage and arrangement. Overlapping equations shall be plotted so that a gap exists between the back and forward stations. The distance through the equation between adjacent full stations is to be shown.

To provide a complete picture, the original groundline is to extend a few stations beyond the beginning and end of the project if this does not require an additional sheet. Future grade lines are to be labeled and shown as short dashed lines. Other grade lines, such as ditches, gutters, and pipes, are to be shown by distinctive symbols and so labeled.

Elevations are to be shown at BVCs, EVCs, PRVCs, PCVCs, equations, paving notches, broken profiles for datum changes, and at each edge of the sheet on profile grade. No additional elevations need be shown on the vertical curves.

Vertical curve lengths and tangent gradients are to be shown. Gradients must be shown at points of reverse or compound vertical curvature. If the profile grade line is not on the construction layout line, a note is to be added to indicate the position of the profile grade, such as "Profile Grade at Inner ETW" or for example "Profile Grade is 1.2 m Left or Right of C/L".

Station pluses are shown for all points where elevations are shown if these points do not fall on the vertical grid lines.

The names of all major intersected streets, railroads, grade separation structures, streams, and other layout lines are to be labeled vertically along the profile.

Roadway excavation and embankment quantities should be listed along the bottom of the profile (on both Full Profile Sheets and Plan and Profile Sheets). These quantities may be listed by station, or individual cuts and fills. Where the roadway crosses a stream or crossroad, the point of crossing should be a division point for listing cut and fill quantities. Station limits for cut and fill quantities need not be identical. Where quantities for major ramps or other roads have been calculated separately, they are to be listed with their respective profiles rather than lumping them with the main line. In such a case, a cross reference note is desirable. Sheet totals should be shown in the lower right corner when quantities are listed by station.

(5) Superelevation Transition Diagram Content

A superelevation transition diagram is a graphic plot of the crown slopes, superelevations, and superelevation transitions of the pavement and shoulders.

The following should be included:

(a) Stationing.

(b) Superelevation in percent.

(c) PI of the superelevation (optional).

(d) Axis of rotation (0% line).

(e) Curve points--Vertical lines should indicate the location of all horizontal curve BCs and ECs. Give the stations, radii, and direction of curvature. (Radii and direction of curvature need not be shown where the super diagram is shown on the combination Plan and Profile Sheet.)

(f) Stationing of all superelevation PIs, BVCs, and EVCs where these do not fall on a vertical grid line.

(g) Each pavement and shoulder plane. Label each.

(h) Bridge locations.

Vertical curves at the beginning and end of superelevation transitions are no longer required.

Certain combinations of profile grade line, vertical curves, superelevation transitions, and variable pavement widths may produce undesirable pavement edge profiles. Where these combinations occur, it is essential to plot edge of pavement and edge of shoulder profiles and graphically adjust bumps and drainage pockets. These plots should be drawn to an exaggerated vertical scale and submitted to the Resident Engineer for use in staking.

NOTES

Return to Section 2 Table of Contents

LAYOUT SHEET CHECK LIST

- ☐ District, County and Route (upper right corner)
- ☐ Sheet Number and Kilometer Post (upper right corner)
- ☐ Standard North Arrow 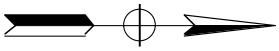
- ☐ Curve Data (all curve alignment numbers shall be consecutive throughout the Layout Sheets)
- ☐ Scale
- ☐ Line Designations
- ☐ Bearing and Distance on All Stationed Lines (showing coordinate information for selected points is optional)
- ☐ Station Equations
- ☐ R/W Lines and Access Control Lines (access control tick marks are not required to be shown on project plans)
- ☐ Fences and Gates
- ☐ Township, Range and Section Lines (not necessary to show within city limits)
- ☐ City, County Limits and Names
- ☐ Guard Railing, Barriers and Crash Cushions
- ☐ Utilities (unless shown on separate utility plans) (label as to type of utility, size and ownership)
- ☐ Bridge Names and Numbers (show br no. only when work is to be performed on bridge and bridge plans are included)
- ☐ Waterways
- ☐ Channel Changes
- ☐ Retaining Walls
- ☐ Mandatory Material and Disposal Sites (use of mandatory sites is to be avoided where possible)
- ☐ Road approaches
- ☐ Detours, if not shown on Detour Plan Sheets
- ☐ Pavement Removal
- ☐ Existing Pavements
- ☐ Curbs and Dikes
- ☐ Sidewalks, Driveways and Curb Ramps (case type)
- ☐ Direction of Flow (stream, creek, river, etc.)
- ☐ Special Structures
- ☐ Survey Monuments (showing coordinate information is optional)
- ☐ Signature, Date of Signature and Registration Seal information completed, (upper right corner)
- ☐ Topography (when pertinent)
- ☐ Cut and Fill Lines
- ☐ Easement and Permits
- ☐ CU No. 00000 EA 000000 (lower right margin)
- ☐ The following note shall be shown on each layout sheet: “For complete R/W and Accurate Access Data, see R/W Record Maps at District Office” (in the case of conventional highway, omit the words “and Accurate Access”)
- ☐ Edge Drain Locations, Including Types of Outlets, Vents and Cleanouts (if not shown on the drainage plan sheets)
- ☐ First sheet of layouts contains notes, legends, symbols and abbreviations not shown on Standard Plans.

Return to Section 2 Table of Contents

NOTE: FOR COMPLETE RIGHT OF WAY AND ACCURATE ACCESS DATA, SEE RIGHT OF WAY RECORD MAPS AT DISTRICT OFFICE.

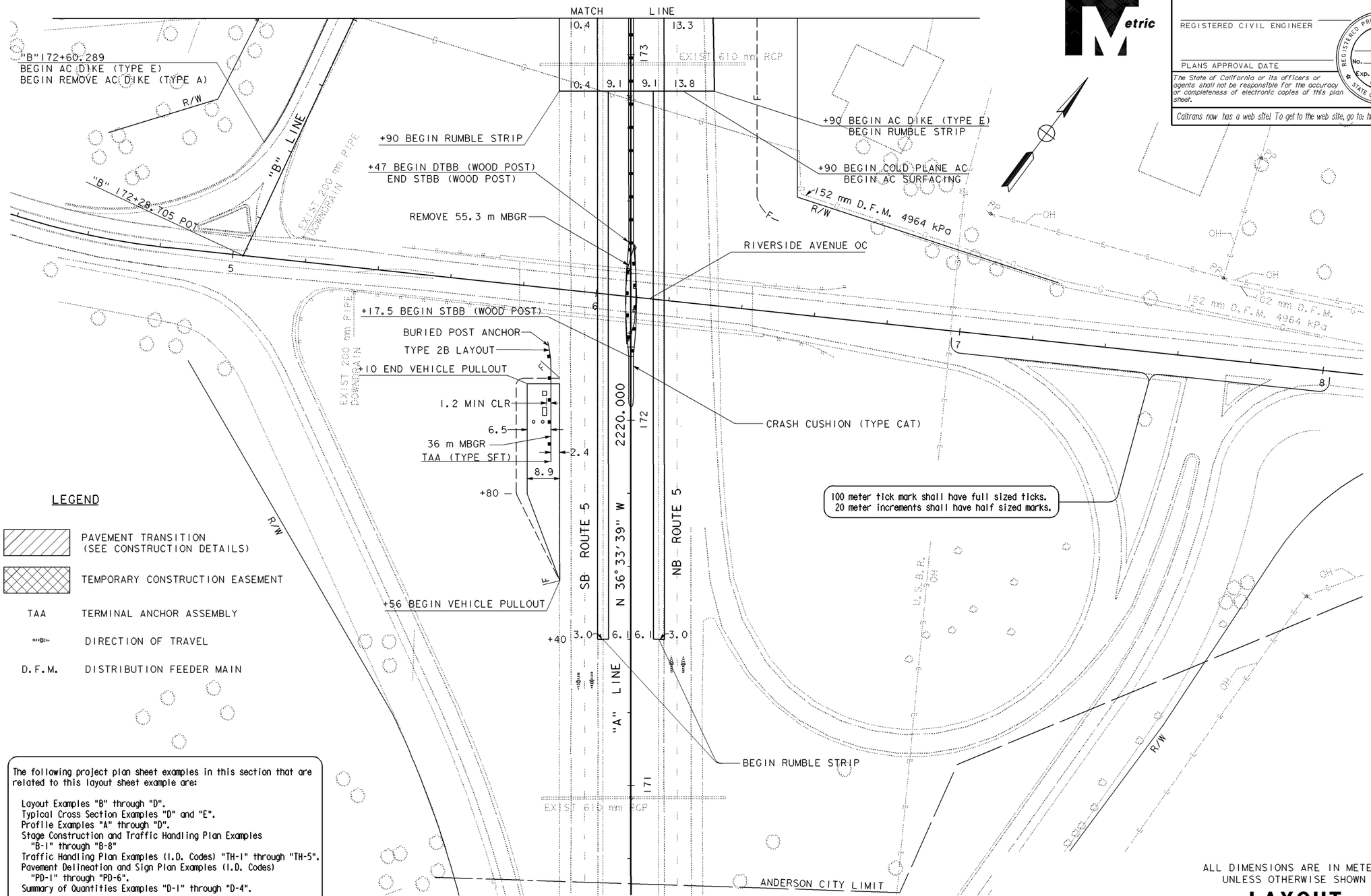

The following project plan sheet examples in this section that are related to this layout sheet example are:

- Layout Examples "B" through "D".
- Typical Cross Section Examples "D" and "E".
- Profile Examples "A" through "D".
- Stage Construction and Traffic Handling Plan Examples "B-1" through "B-8"
- Traffic Handling Plan Examples (I.D. Codes) "TH-1" through "TH-5".
- Pavement Delineation and Sign Plan Examples (I.D. Codes) "PD-1" through "PD-6".
- Summary of Quantities Examples "D-1" through "D-4".

LAYOUT SHEET, EXAMPLE "A"

ALL DIMENSIONS ARE IN METERS UNLESS OTHERWISE SHOWN

LAYOUT

SCALE 1:500

L-1

DIST	COUNTY	ROUTE	KILOMETER POST TOTAL PROJECT	SHEET No	TOTAL SHEETS

REGISTERED CIVIL ENGINEER

PLANS APPROVAL DATE

REGISTERED PROFESSIONAL ENGINEER No. Exp. CIVIL STATE OF CALIFORNIA

The State of California or its officers or agents shall not be responsible for the accuracy or completeness of electronic copies of this plan sheet.

Caltrans now has a web site! To get to the web site, go to: http://www.dot.ca.gov

Caltrans Metric

DATE	REVISED BY	DATE REVISED

CALCULATED/DESIGNED BY

CHECKED BY

PROJECT ENGINEER

STATE OF CALIFORNIA - DEPARTMENT OF TRANSPORTATION

Caltrans DESIGN

10-APR-2001 dpm2_077.dgn 09:00

LAST REVISION 04-02-01 DATE PLOTTED => 10-APR-2001 TIME PLOTTED => 09:00

FOR REDUCED PLANS ORIGINAL SCALE IS IN MILLIMETERS 0 20 40 60 80

USERNAME => trmikesl DGN FILE => dpm2_077.dgn

CU 00000 EA 000000

Return to Section 2 Table of Contents

DIST	COUNTY	ROUTE	KILOMETER POST TOTAL PROJECT	SHEET No	TOTAL SHEETS

REGISTERED CIVIL ENGINEER

PLANS APPROVAL DATE

REGISTERED PROFESSIONAL ENGINEER No. Exp. CIVIL STATE OF CALIFORNIA

The State of California or its officers or agents shall not be responsible for the accuracy or completeness of electronic copies of this plan sheet.

Caltrans now has a web site! To get to the web site, go to: http://www.dot.ca.gov

Caltrans Metric

NOTE: FOR COMPLETE RIGHT OF WAY AND ACCURATE ACCESS DATA, SEE RIGHT OF WAY RECORD MAPS AT DISTRICT OFFICE.

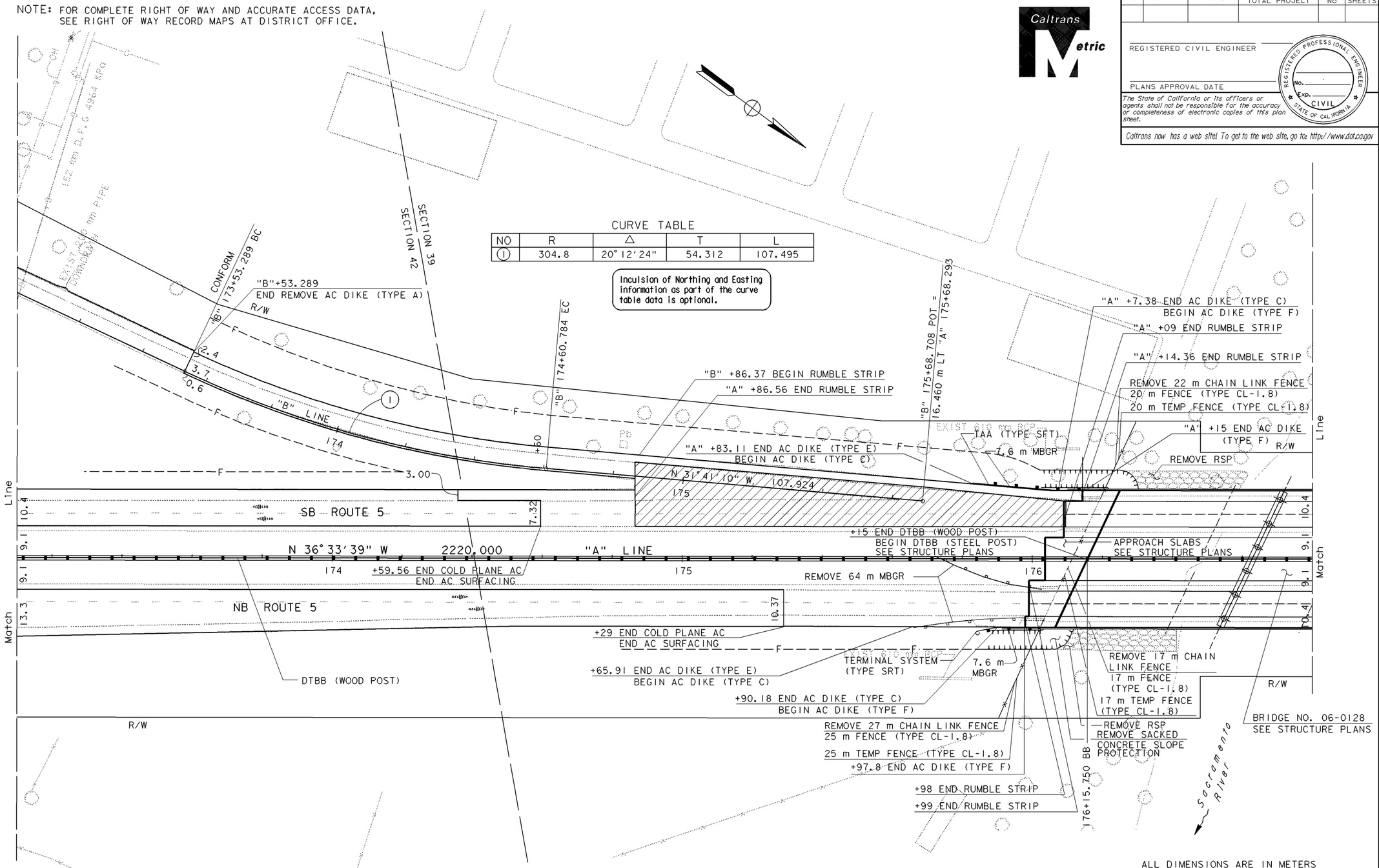

CURVE TABLE

NO	R	Δ	T	L
1	304.8	20° 12' 24"	54.312	107.495

Inclusion of Northing and Easting information as part of the curve table data is optional.

ALL DIMENSIONS ARE IN METERS UNLESS OTHERWISE SHOWN

LAYOUT

SCALE 1:500

L-2

LAYOUT SHEET, EXAMPLE "B"

DATE	REVISED BY	DATE REVISED

CALCULATED/DESIGNED BY

CHECKED BY

PROJECT ENGINEER

STATE OF CALIFORNIA - DEPARTMENT OF TRANSPORTATION

DESIGN

Caltrans

10-APR-2001 dpm2_078.dgn 09:01

LAST REVISION 04-02-01

DATE PLOTTED => 10-APR-2001
TIME PLOTTED => 09:01

FOR REDUCED PLANS ORIGINAL SCALE IS IN MILLIMETERS 0 20 40 60 80

USERNAME => trmikesl
DGN FILE => dpm2_078.dgn

CU 00000 EA 000000

Return to Section 2 Table of Contents

NOTE: FOR COMPLETE RIGHT OF WAY AND ACCURATE ACCESS DATA, SEE RIGHT OF WAY RECORD MAPS AT DISTRICT OFFICE.

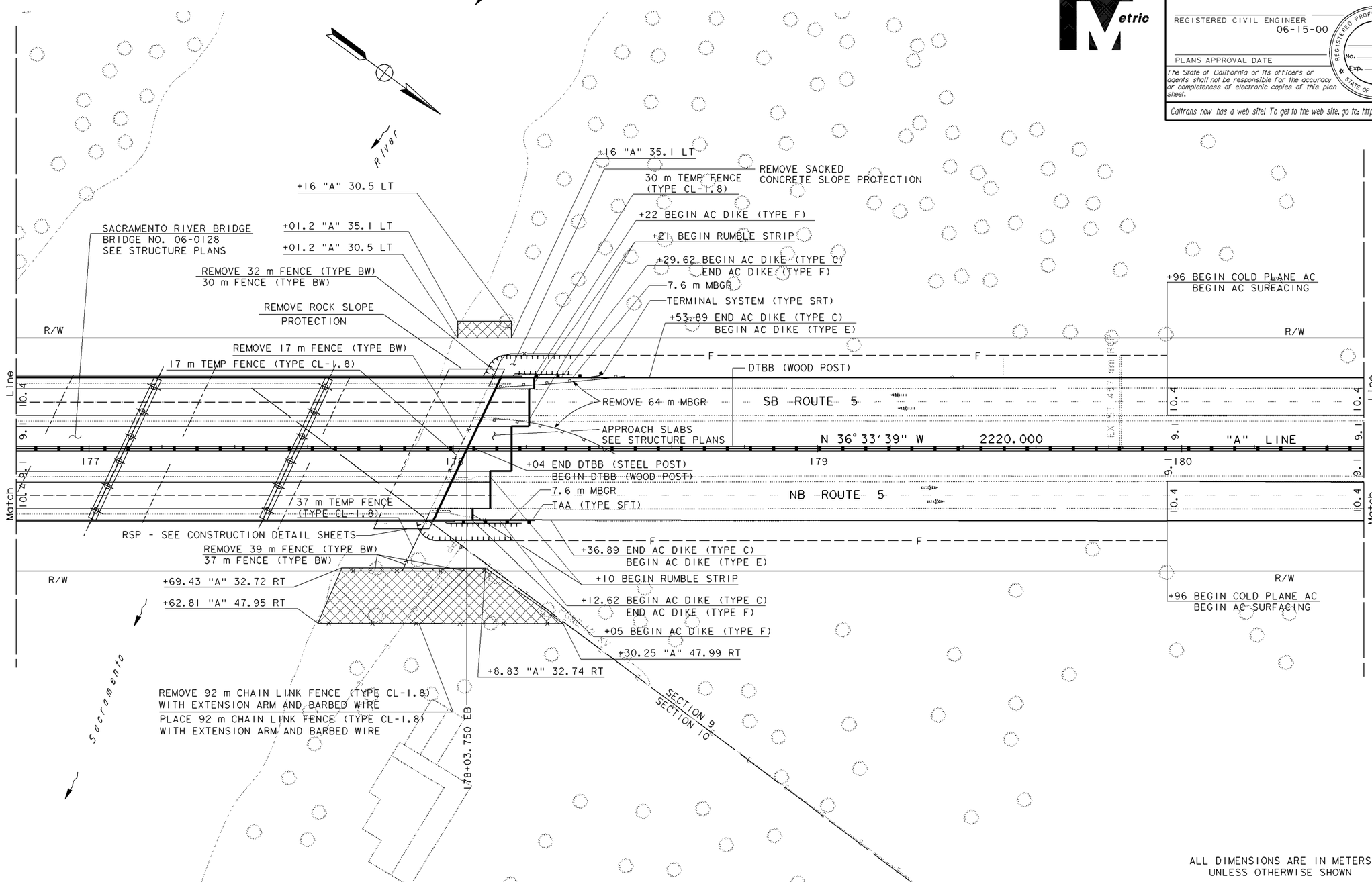

LAYOUT SHEET, EXAMPLE "C"

ALL DIMENSIONS ARE IN METERS UNLESS OTHERWISE SHOWN

LAYOUT

SCALE 1:500

L-3

DIST	COUNTY	ROUTE	KILOMETER POST TOTAL PROJECT	SHEET No	TOTAL SHEETS

REGISTERED CIVIL ENGINEER 06-15-00

PLANS APPROVAL DATE

REGISTERED PROFESSIONAL ENGINEER NO. EXP. STATE OF CALIFORNIA

The State of California or its officers or agents shall not be responsible for the accuracy or completeness of electronic copies of this plan sheet.

Caltrans now has a web site! To get to the web site, go to: http://www.dot.ca.gov

Caltrans Metric

DATE	REVISED BY	DATE REVISED
CALCULATED/ DESIGNED BY		CHECKED BY

PROJECT ENGINEER

STATE OF CALIFORNIA - DEPARTMENT OF TRANSPORTATION

Caltrans **DESIGN**

10-APR-2001 dpm2_079.dgn 09:01

FOR REDUCED PLANS ORIGINAL SCALE IS IN MILLIMETERS 0 20 40 60 80

USERNAME => trmikesl
DGN FILE => dpm2_079.dgn

CU 00000 EA 000000

LAST REVISION 04-02-01 DATE PLOTTED => 10-APR-2001 TIME PLOTTED => 09:01

Return to Section 2 Table of Contents

NOTE: FOR COMPLETE RIGHT OF WAY AND ACCURATE ACCESS DATA, SEE RIGHT OF WAY RECORD MAPS AT DISTRICT OFFICE.

DIST	COUNTY	ROUTE	KILOMETER POST TOTAL PROJECT	SHEET No	TOTAL SHEETS

REGISTERED CIVIL ENGINEER

PLANS APPROVAL DATE

REGISTERED PROFESSIONAL ENGINEER No. Exp. CIVIL STATE OF CALIFORNIA

The State of California or its officers or agents shall not be responsible for the accuracy or completeness of electronic copies of this plan sheet.

Caltrans now has a web site! To get to the web site, go to: http://www.dot.ca.gov

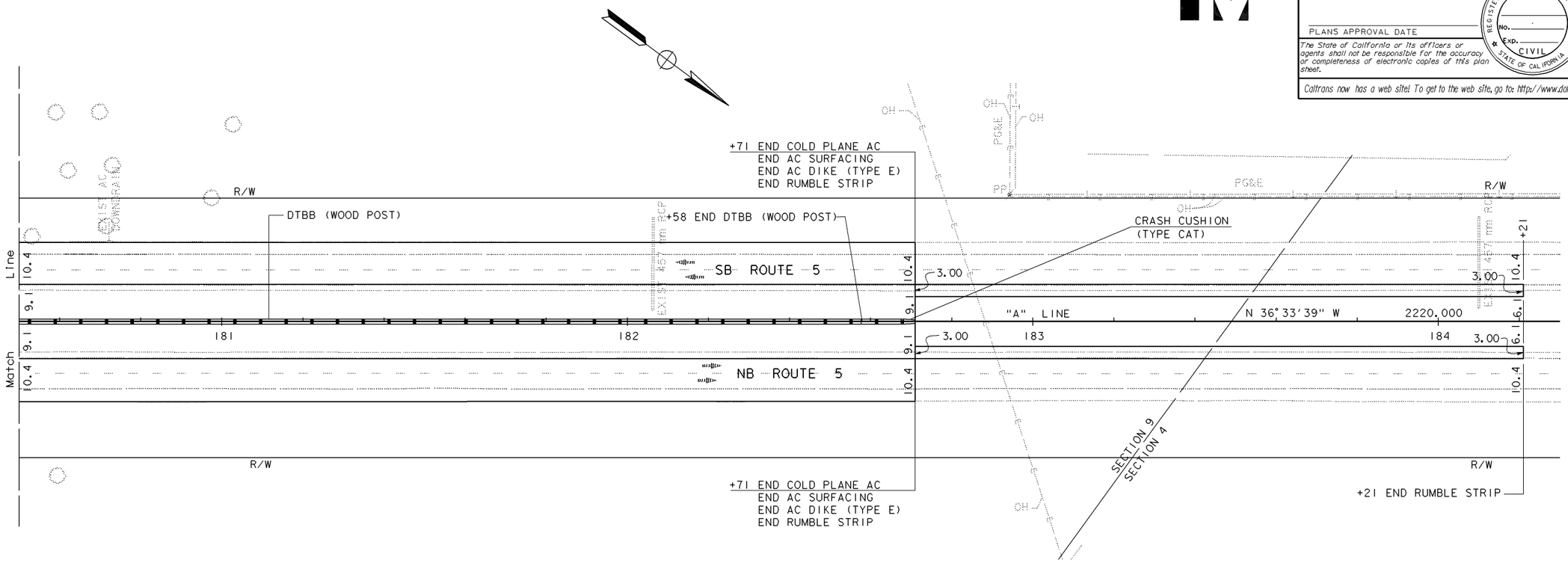

LAYOUT SHEET, EXAMPLE "D"

ALL DIMENSIONS ARE IN METERS
UNLESS OTHERWISE SHOWN

LAYOUT

SCALE 1:500

L-4

STATE OF CALIFORNIA - DEPARTMENT OF TRANSPORTATION

DESIGN

Caltrans

PROJECT ENGINEER | REVISED BY | DATE REVISED | CALCULATED/DESIGNED BY | CHECKED BY

10-APR-2001 dpm2_080.dgn 09:01

LAST REVISION 04-02-01 | DATE PLOTTED => 10-APR-2001 | TIME PLOTTED => 09:01

FOR REDUCED PLANS ORIGINAL SCALE IS IN MILLIMETERS 0 20 40 60 80

USERNAME => trmikesl
DGN FILE => dpm2_080.dgn

CU 00000 | EA 000000

Return to Section 2 Table of Contents

NOTE:
FOR COMPLETE R/W DATA, SEE R/W RECORDS MAPS AT DISTRICT OFFICE.

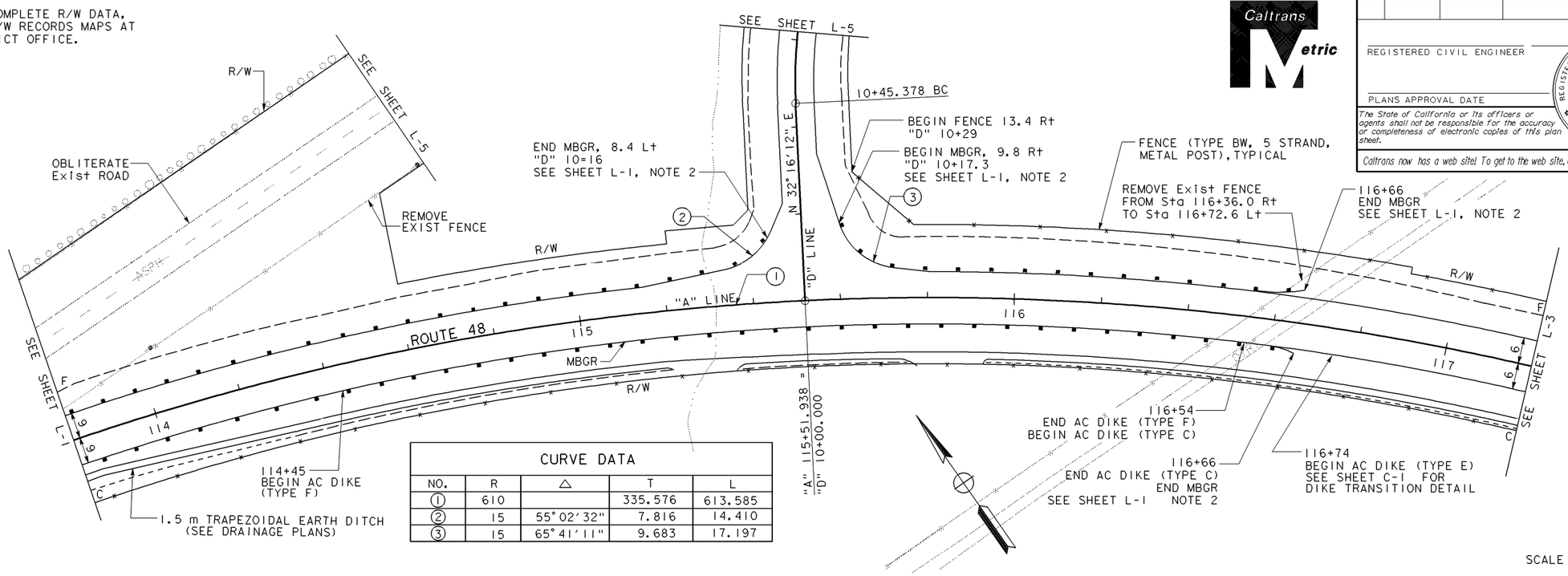

CURVE DATA				
NO.	R	△	T	L
1	610		335.576	613.585
2	15	55° 02' 32"	7.816	14.410
3	15	65° 41' 11"	9.683	17.197

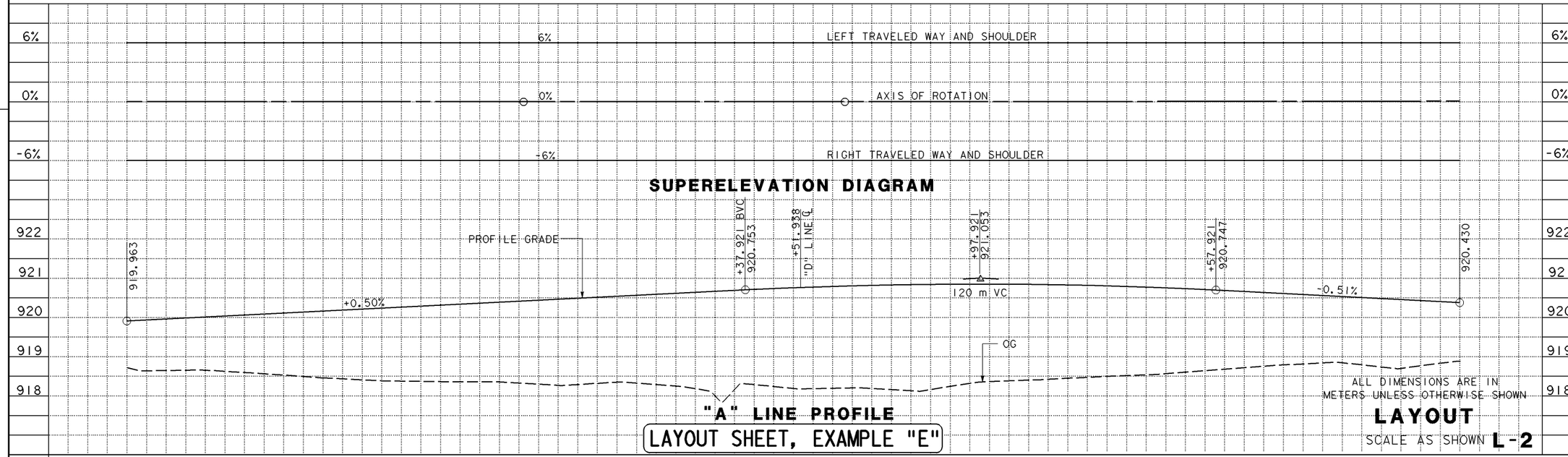

LAYOUT SHEET, EXAMPLE "E"

ALL DIMENSIONS ARE IN METERS UNLESS OTHERWISE SHOWN

LAYOUT

SCALE AS SHOWN **L-2**

DIST	COUNTY	ROUTE	KILOMETER POST TOTAL PROJECT	SHEET No	TOTAL SHEETS

REGISTERED CIVIL ENGINEER

PLANS APPROVAL DATE

REGISTERED PROFESSIONAL ENGINEER No. Exp. CIVIL STATE OF CALIFORNIA

The State of California or its officers or agents shall not be responsible for the accuracy or completeness of electronic copies of this plan sheet.

Caltrans now has a web site! To get to the web site, go to: http://www.dot.ca.gov

Caltrans Metric

DATE	REVISED BY	DATE REVISED

CALCULATED/DESIGNED BY

CHECKED BY

PROJECT ENGINEER

STATE OF CALIFORNIA - DEPARTMENT OF TRANSPORTATION

Caltrans PROJECT DEVELOPMENT

LAST REVISION 04-02-01

DATE PLOTTED => 10-APR-2001
TIME PLOTTED => 09:02

FOR REDUCED PLANS ORIGINAL SCALE IS IN MILLIMETERS 0 20 40 60 80

USERNAME => trmikesl
DGN FILE => dpm2_081.dgn

CU 00000 EA 000000

Return to Section 2 Table of Contents

Return to Section 2 Table of Contents

(Blank)

PROFILE CHECK LIST

- ☐ Profile Lines With Designation and Grade Percent
- ☐ Original Ground Lines With Label - Ground line should extend a few stations beyond the beginning and end of profiles on the first and last sheet
- ☐ Future Grade Lines should be Dashed and Labeled
- ☐ Vertical Curve Lengths
- ☐ Elevations (shown at BVC, EVC, PRVC, and PCVC, equations, paving notches, broken profiles, and at each edge of sheet on profile grade)
- ☐ Top Rail Elevation (railroad)
- ☐ Channel, Ditch, and Gutter Grade Lines with Grade in Percent
- ☐ Station and Elevation of Begin and End Bridge
- ☐ Earthwork Quantities (listed by station, or individual cuts and fills) - sheet total
- ☐ Label Bridge Name and Number (show Bridge No. only when work is to be performed on bridge and bridge plans are included)
- ☐ Street or Road Centerline and Name where it crosses Main Profile Line
- ☐ Road and Driveway Approach Grade Lines with Line Designation and Grade in Percent
- ☐ Datum at both edges of sheet (on top of the horizontal grid line)
- ☐ Stations Pluses if not on Vertical Grid Lines
- ☐ Equations
- ☐ Benchmarks (showing elevations is optional)
- ☐ Superelevation Transition Diagram (shown directly above the corresponding profile where sufficient space is available on profile sheet)
- ☐ CU No. and EA No. (lower right corner)
- ☐ Signature, Date of Signature and Registration Seal information completed, (upper right corner).

Return to Section 2 Table of Contents

DIST	COUNTY	ROUTE	KILOMETER POST TOTAL PROJECT	SHEET No	TOTAL SHEETS

REGISTERED CIVIL ENGINEER

PLANS APPROVAL DATE

REGISTERED PROFESSIONAL ENGINEER — No. — Exp. — CIVIL — STATE OF CALIFORNIA

The State of California or its officers or agents shall not be responsible for the accuracy or completeness of electronic copies of this plan sheet.

Caltrans now has a web site! To get to the web site, go to: http://www.dot.ca.gov

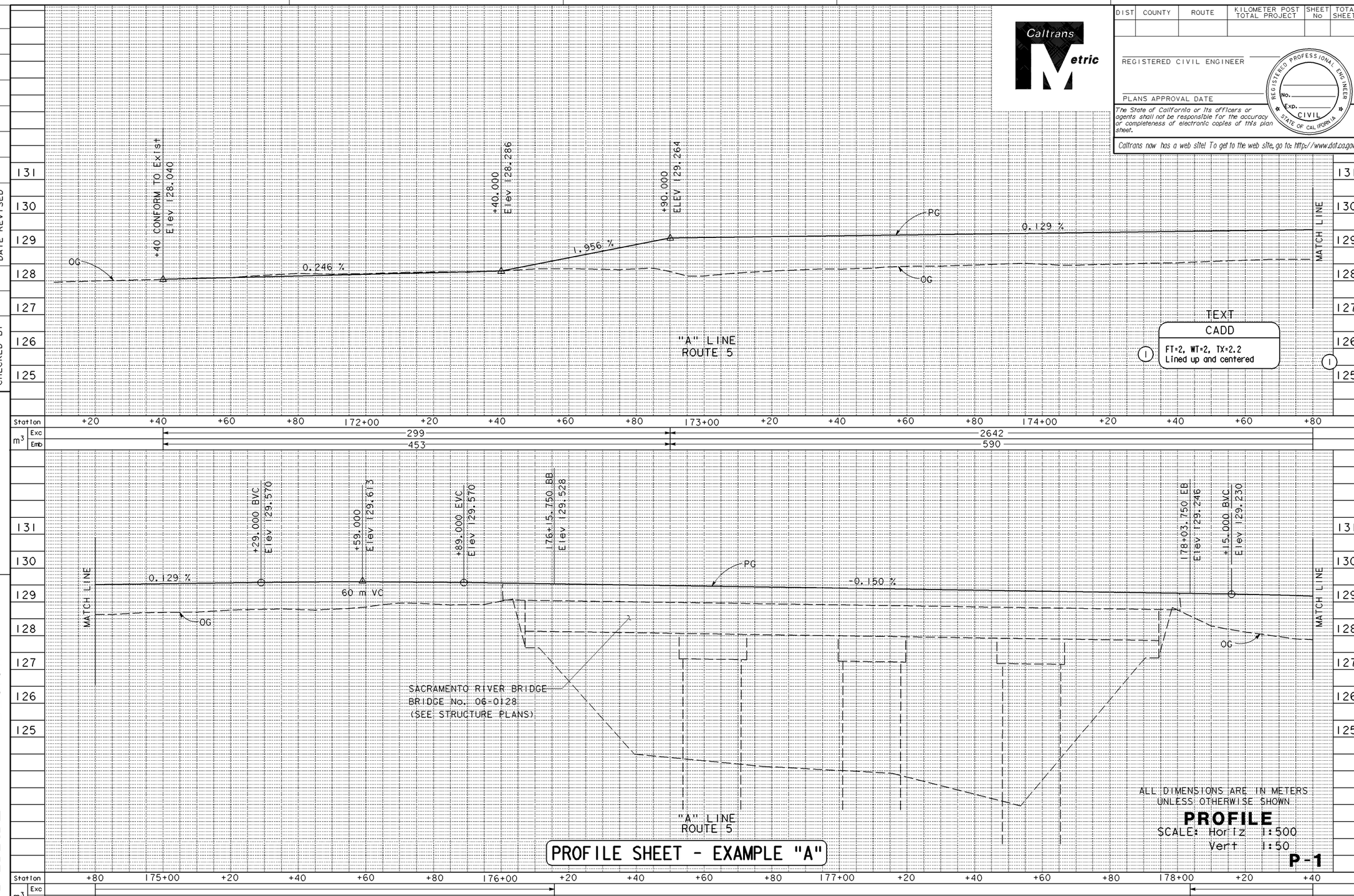

PROFILE SHEET - EXAMPLE "A"

DATE	REVISED BY	DATE REVISED

CALCULATED/DESIGNED BY

CHECKED BY

PROJECT ENGINEER

STATE OF CALIFORNIA - DEPARTMENT OF TRANSPORTATION

Caltrans DESIGN

10-APR-2001 dpm2_085.dgn 09:02

LAST REVISION 04-02-01

DATE PLOTTED => 10-APR-2001
TIME PLOTTED => 09:02

FOR REDUCED PLANS ORIGINAL SCALE IS IN MILLIMETERS 0 20 40 60 80

USERNAME => trmikesl
DGN FILE => dpm2_085.dgn

CU 03261 EA 260121

Return to Section 2 Table of Contents

DIST	COUNTY	ROUTE	KILOMETER POST TOTAL PROJECT	SHEET No	TOTAL SHEETS

REGISTERED CIVIL ENGINEER

PLANS APPROVAL DATE

REGISTERED PROFESSIONAL ENGINEER No. Exp. CIVIL STATE OF CALIFORNIA

The State of California or its officers or agents shall not be responsible for the accuracy or completeness of electronic copies of this plan sheet.

Caltrans now has a web site! To get to the web site, go to: http://www.dot.ca.gov

Caltrans Metric

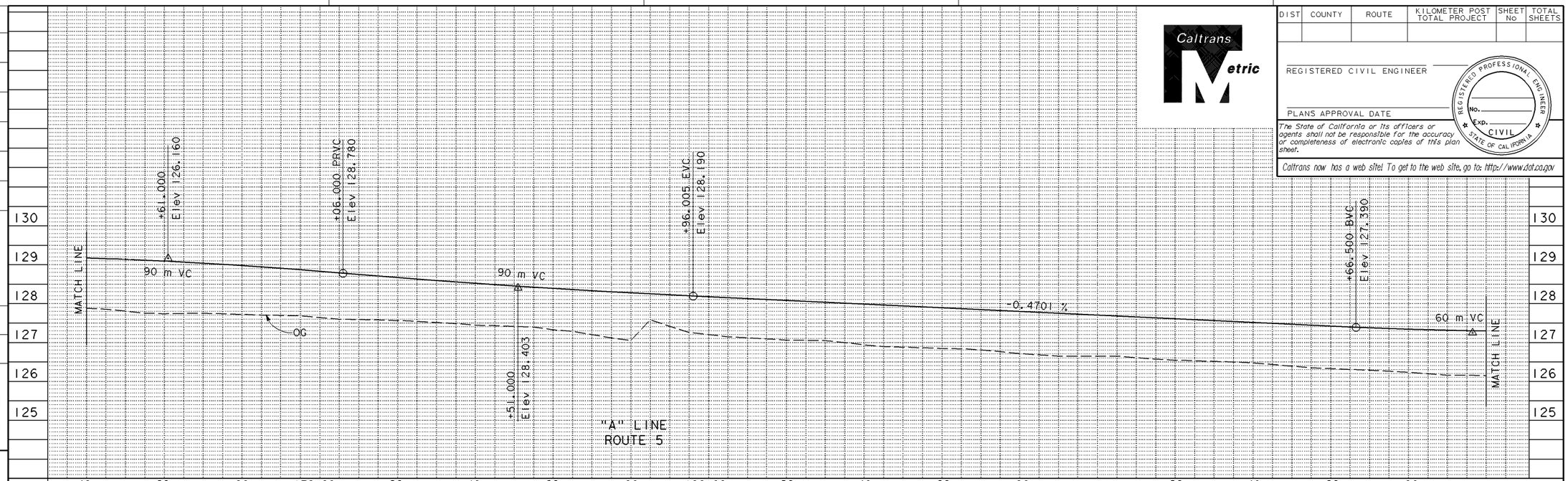

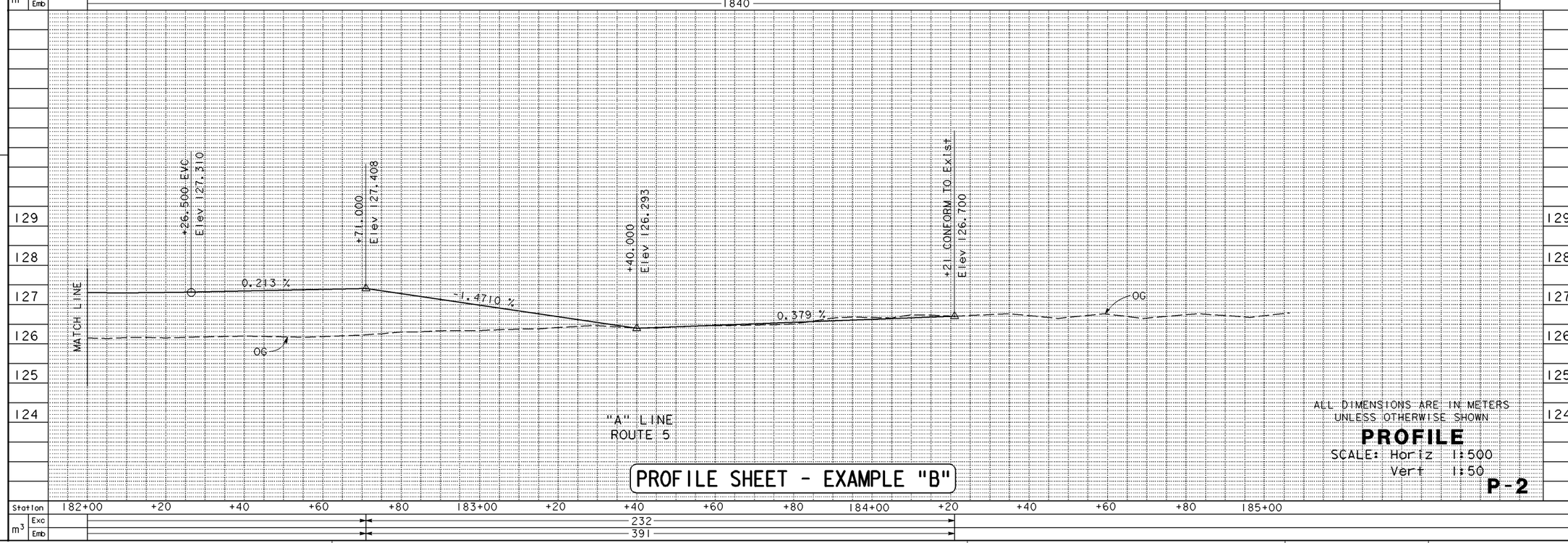

ALL DIMENSIONS ARE IN METERS UNLESS OTHERWISE SHOWN

PROFILE

SCALE: Horiz 1:500
Vert 1:50

P-2

PROFILE SHEET - EXAMPLE "B"

REVISED BY | DATE REVISED

DATE

CALCULATED/DESIGNED BY | CHECKED BY

PROJECT ENGINEER

STATE OF CALIFORNIA - DEPARTMENT OF TRANSPORTATION

Caltrans **DESIGN**

10-APR-2001 dpm2_086.dgn 09:02

LAST REVISION 04-02-01 | DATE PLOTTED => 10-APR-2001 TIME PLOTTED => 09:02

FOR REDUCED PLANS ORIGINAL SCALE IS IN MILLIMETERS 0 20 40 60 80

USERNAME => trmikesl
DGN FILE => dpm2_086.dgn

CU 03261 | EA 260121

Return to Section 2 Table of Contents

DIST	COUNTY	ROUTE	KILOMETER POST TOTAL PROJECT	SHEET No	TOTAL SHEETS

Caltrans Metric

REGISTERED CIVIL ENGINEER

PLANS APPROVAL DATE

REGISTERED PROFESSIONAL ENGINEER NO. EXP. CIVIL STATE OF CALIFORNIA

The State of California or its officers or agents shall not be responsible for the accuracy or completeness of electronic copies of this plan sheet.

Caltrans now has a web site! To get to the web site, go to: http://www.dot.ca.gov

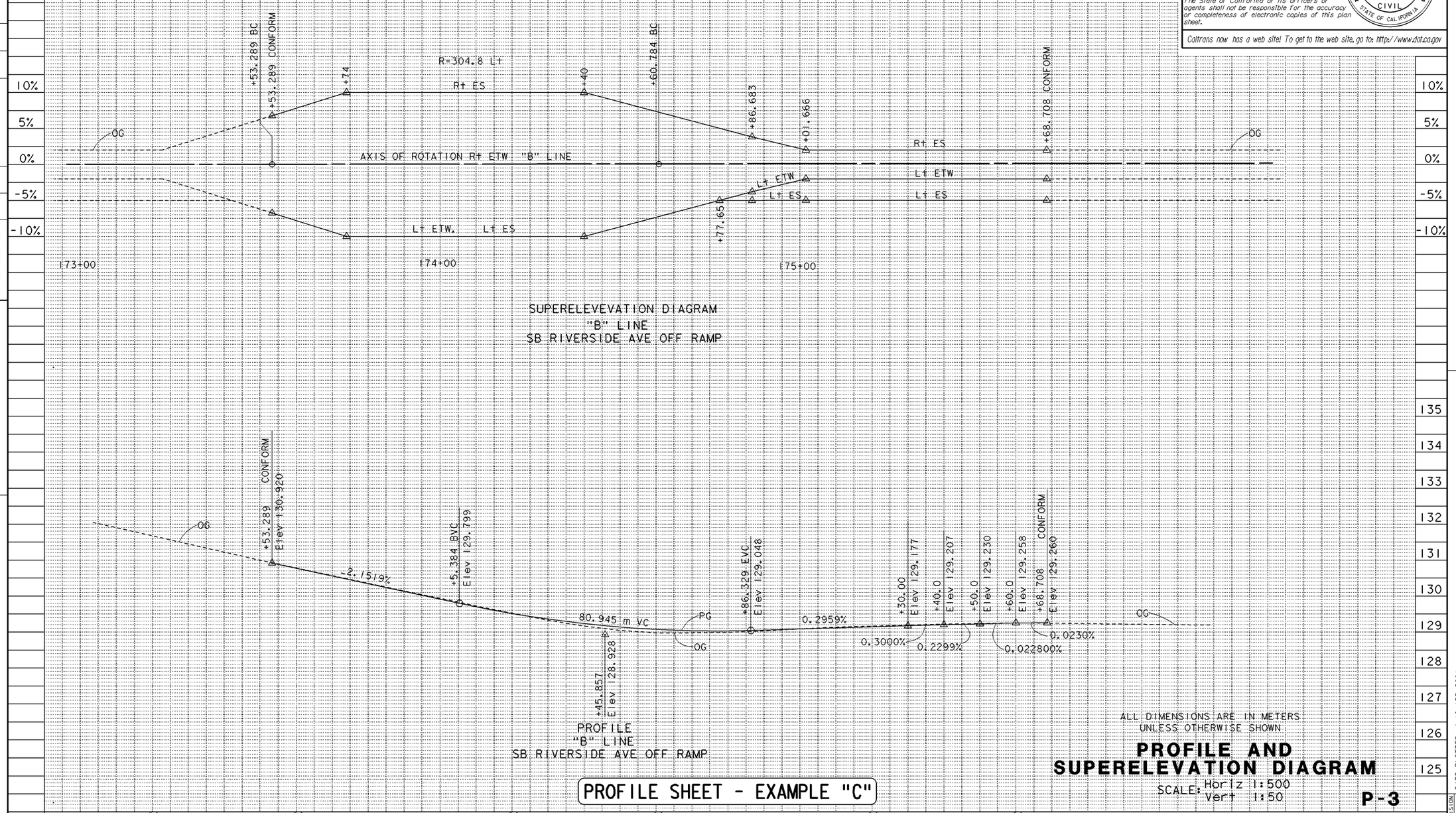

ALL DIMENSIONS ARE IN METERS UNLESS OTHERWISE SHOWN

PROFILE AND SUPERELEVATION DIAGRAM

SCALE: Horiz 1:500
Vert 1:50

P-3

PROFILE SHEET - EXAMPLE "C"

DATE	REVISED BY	DATE REVISED

CALCULATED/DESIGNED BY

CHECKED BY

PROJECT ENGINEER

STATE OF CALIFORNIA - DEPARTMENT OF TRANSPORTATION

DESIGN

Caltrans

10-APR-2001 dpm2_087.dgn 09:02

FOR REDUCED PLANS ORIGINAL SCALE IS IN MILLIMETERS 0 20 40 60 80

USERNAME => trmikesl
DGN FILE => dpm2_087.dgn

CU 03261

EA 260121

LAST REVISION 04-02-01

DATE PLOTTED => 10-APR-2001
TIME PLOTTED => 09:02

Return to Section 2 Table of Contents

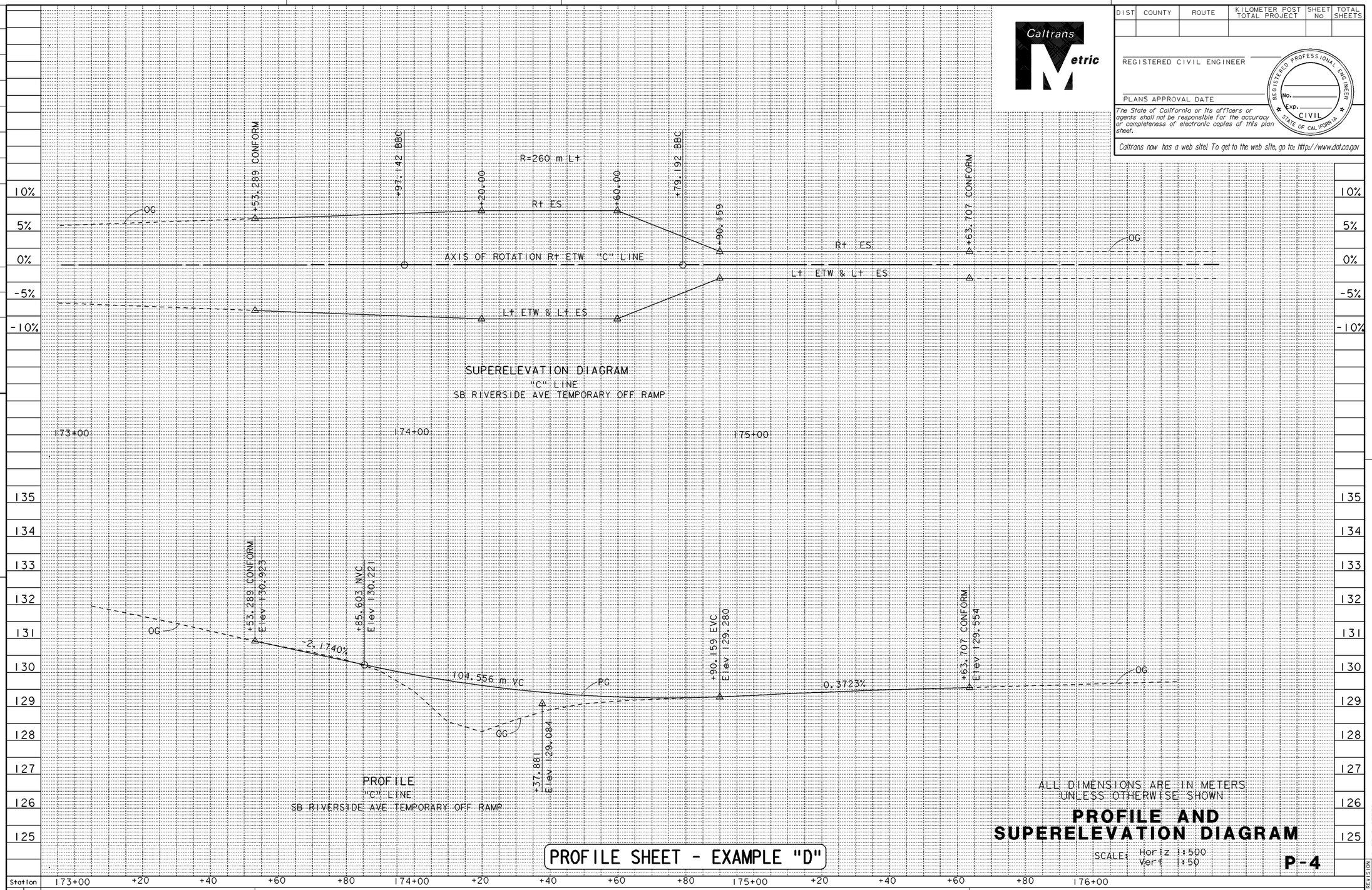

PROFILE SHEET - EXAMPLE "D"

ALL DIMENSIONS ARE IN METERS
UNLESS OTHERWISE SHOWN

PROFILE AND SUPERELEVATION DIAGRAM

SCALE: Horiz 1:500
Vert 1:50

P-4

DIST	COUNTY	ROUTE	KILOMETER POST TOTAL PROJECT	SHEET No	TOTAL SHEETS

Caltrans Metric

REGISTERED CIVIL ENGINEER

PLANS APPROVAL DATE

REGISTERED PROFESSIONAL ENGINEER NO. EXP. CIVIL STATE OF CALIFORNIA

The State of California or its officers or agents shall not be responsible for the accuracy or completeness of electronic copies of this plan sheet.

Caltrans now has a web site! To get to the web site, go to: http://www.dot.ca.gov

REVISED BY | DATE | DATE REVISED

CALCULATED/DESIGNED BY | CHECKED BY

PROJECT ENGINEER

STATE OF CALIFORNIA - DEPARTMENT OF TRANSPORTATION

Caltrans **DESIGN**

10-APR-2001 dpm2_088.dgn 09:02

LAST REVISION 04-02-01 | DATE PLOTTED => 10-APR-2001 TIME PLOTTED => 09:02

FOR REDUCED PLANS ORIGINAL SCALE IS IN MILLIMETERS 0 20 40 60 80

USERNAME => trmlkesl
DGN FILE => dpm2_088.dgn

CU 03261 | EA 260121

Return to Section 2 Table of Contents

DIST	COUNTY	ROUTE	KILOMETER POST TOTAL PROJECT	SHEET No	TOTAL SHEETS

Caltrans Metric

REGISTERED CIVIL ENGINEER

PLANS APPROVAL DATE

REGISTERED PROFESSIONAL ENGINEER No. Exp. CIVIL STATE OF CALIFORNIA

The State of California or its officers or agents shall not be responsible for the accuracy or completeness of electronic copies of this plan sheet.

Caltrans now has a web site! To get to the web site, go to: http://www.dot.ca.gov

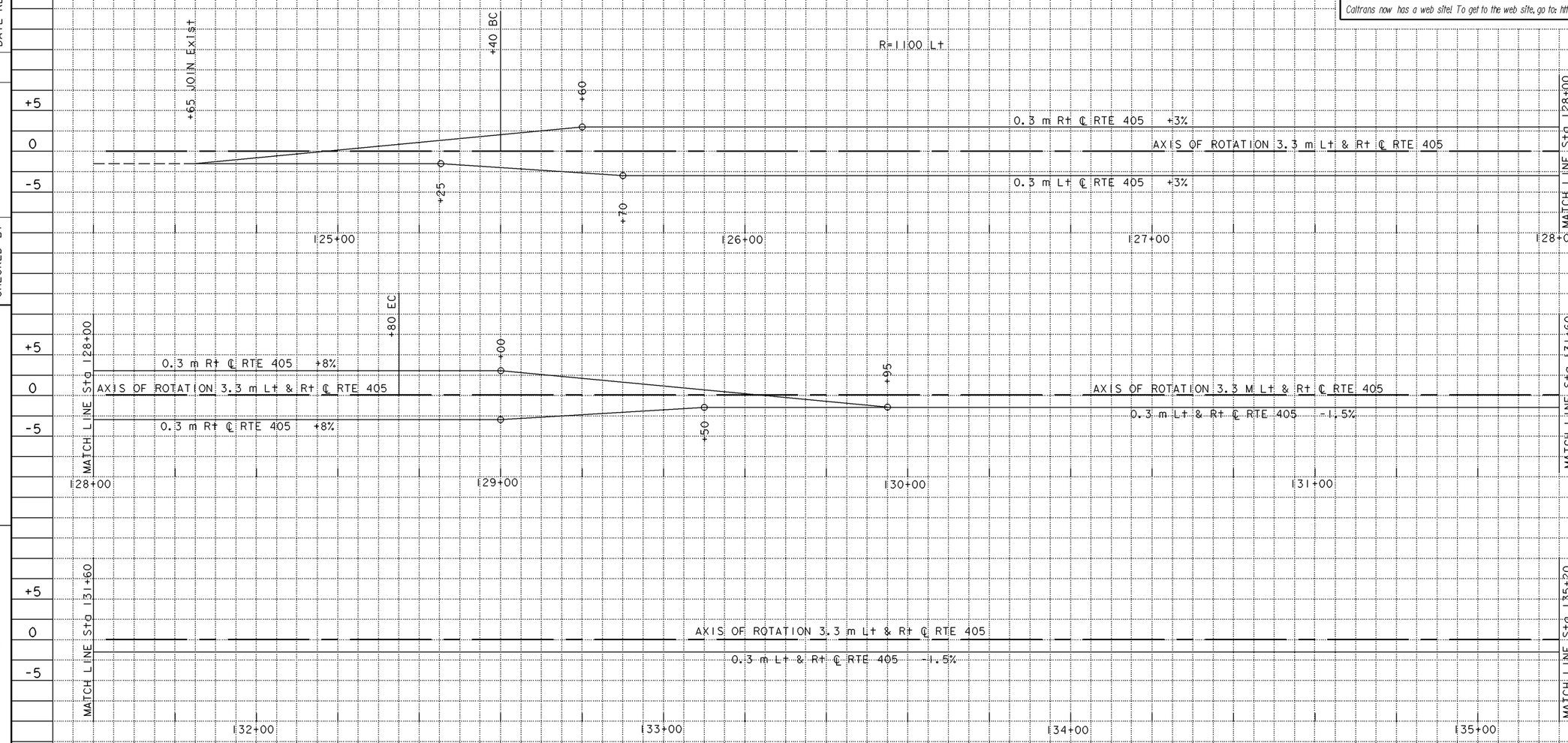

ROUTE 405 MEDIAN

ALL DIMENSIONS ARE IN METERS UNLESS OTHERWISE SHOWN

SUPERELEVATION DIAGRAM

SCALE Horiz 1:500

SE-1

SUPERELEVATION DIAGRAM SHEET - EXAMPLE "A"
(CONTAINS ONLY SUPERELEVATION INFORMATION)

Station	
m^3 Exc	
m^3 Emb	

DATE | REVISED BY | DATE REVISED

CALCULATED/DESIGNED BY | CHECKED BY

PROJECT ENGINEER

STATE OF CALIFORNIA - DEPARTMENT OF TRANSPORTATION

Caltrans DESIGN

LAST REVISION 04-02-01 | DATE PLOTTED => 10-APR-2001 | TIME PLOTTED => 09:02

FOR REDUCED PLANS ORIGINAL SCALE IS IN MILLIMETERS 0 20 40 60 80

USERNAME => trmikesl
DGN FILE => dpm2_089.dgn

CU 00000 | EA 000000

Return to Section 2 Table of Contents

Return to Section 2 Table of Contents

(Blank)

2-2.5 Construction Details

This sheet supplies supplementary information that cannot be shown on the layout plan sheets because of complex and extensive details required. The details shown on the Construction Detail Sheet are unique to a specific project and those for which there are no Standard Plans.

Normally these sheets are prepared to a larger scale than the plan sheets, such as 1:200 or larger, or labeled as no scale. Items need to be fully dimensioned so that they are buildable and the quantities are calculable. Examples of construction items that may require construction details are curb transitions, guard railing, sidewalks, curbs, pavement surfacing conforms, and driveways. Details for other work (for example: drainage, signing, pavement delineation, etc.) are to be shown on their own detail sheets.

Pavement elevations may be shown on the Construction Detail sheets. Pavement elevations generally will be required at large curve returns, some speed-change lanes and at transition areas that cannot be defined with information on the profiles and superelevation diagrams.

Return to Section 2 Table of Contents

DIST	COUNTY	ROUTE	KILOMETER POST TOTAL PROJECT	SHEET No	TOTAL SHEETS

REGISTERED CIVIL ENGINEER

PLANS APPROVAL DATE

REGISTERED PROFESSIONAL ENGINEER No. Exp. CIVIL STATE OF CALIFORNIA

The State of California or its officers or agents shall not be responsible for the accuracy or completeness of electronic copies of this plan sheet.

Caltrans now has a web site! To get to the web site, go to: http://www.dot.ca.gov

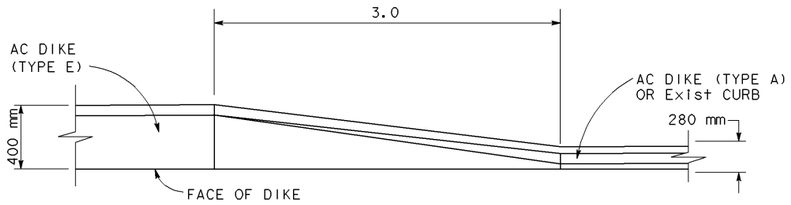

AC DIKE (TYPE E) TRANSITION TO AC DIKE (TYPE A) OR EXISTING CURB

PLAN VIEW

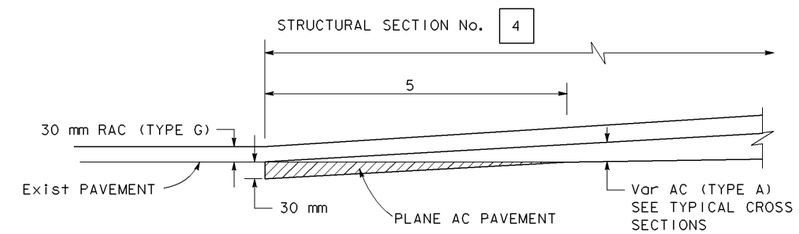

PAVING TRANSITION

BETWEEN STRUCTURAL SECTION No. 4 AND RAC SURFACING

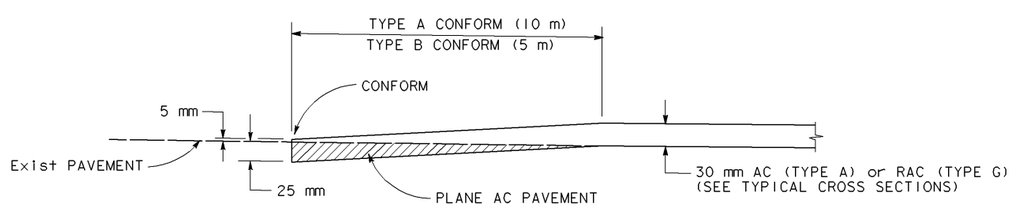

PAVING CONFORM

ALL DIMENSIONS ARE IN METERS UNLESS OTHERWISE SHOWN

CONSTRUCTION DETAILS

NO SCALE

C-1

STATE OF CALIFORNIA - DEPARTMENT OF TRANSPORTATION

Caltrans DESIGN

PROJECT ENGINEER

CALCULATED/DESIGNED BY

CHECKED BY

DATE REVISED BY

DATE REVISED

LAST REVISION 04-02-01

DATE PLOTTED => 10-APR-2001
TIME PLOTTED => 09:03

FOR REDUCED PLANS ORIGINAL SCALE IS IN MILLIMETERS 0 20 40 60 80

USERNAME => trmikesl
DGN FILE => dpm2_093.dgn

CU 00000 EA 000000

Return to Section 2 Table of Contents

CURVE DATA				
NO	R	Δ	T	L
1	610	57° 37′ 57″	335.576	613.585
2	15	55° 02′ 32″	7.816	14.410
3	15	65° 41′ 11″	9.683	17.197

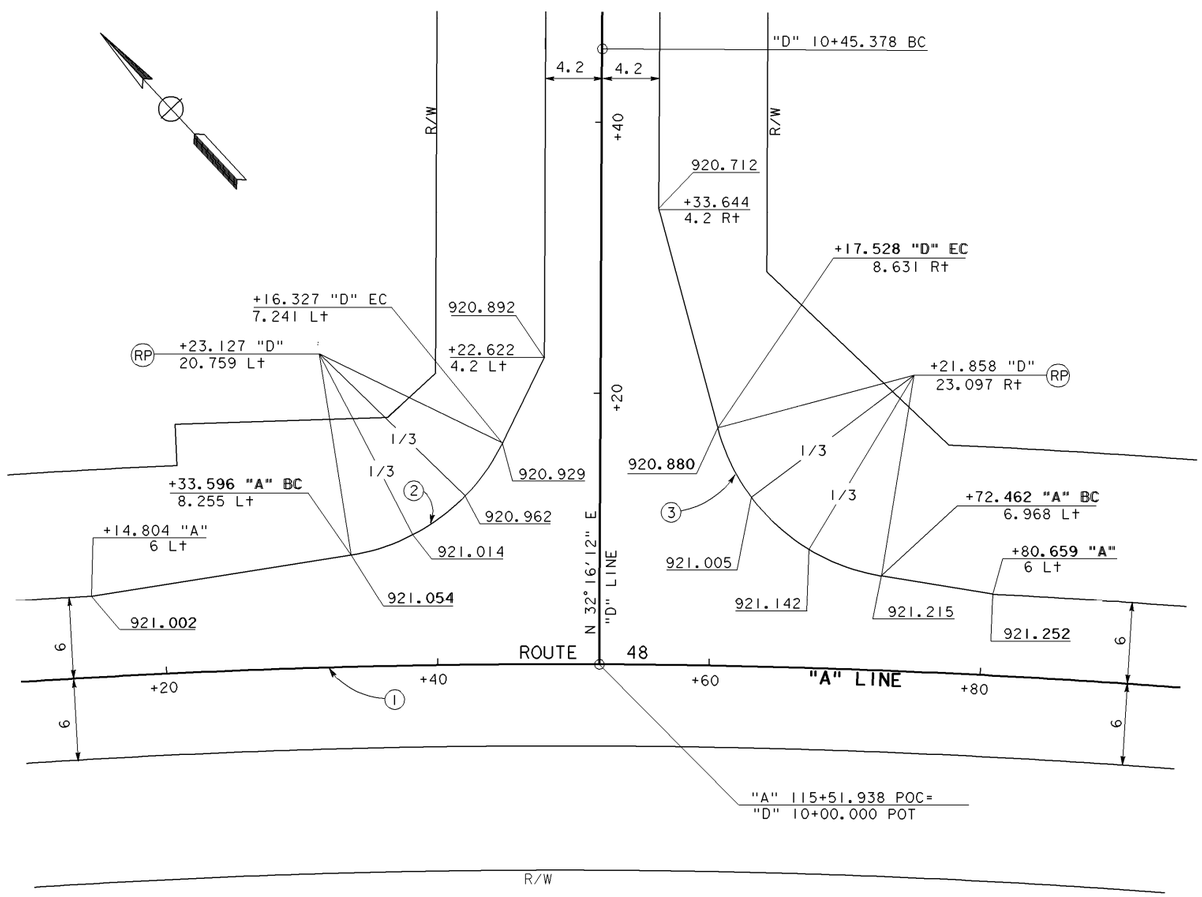

WEST INTERSECTION
SCALE: 1:200

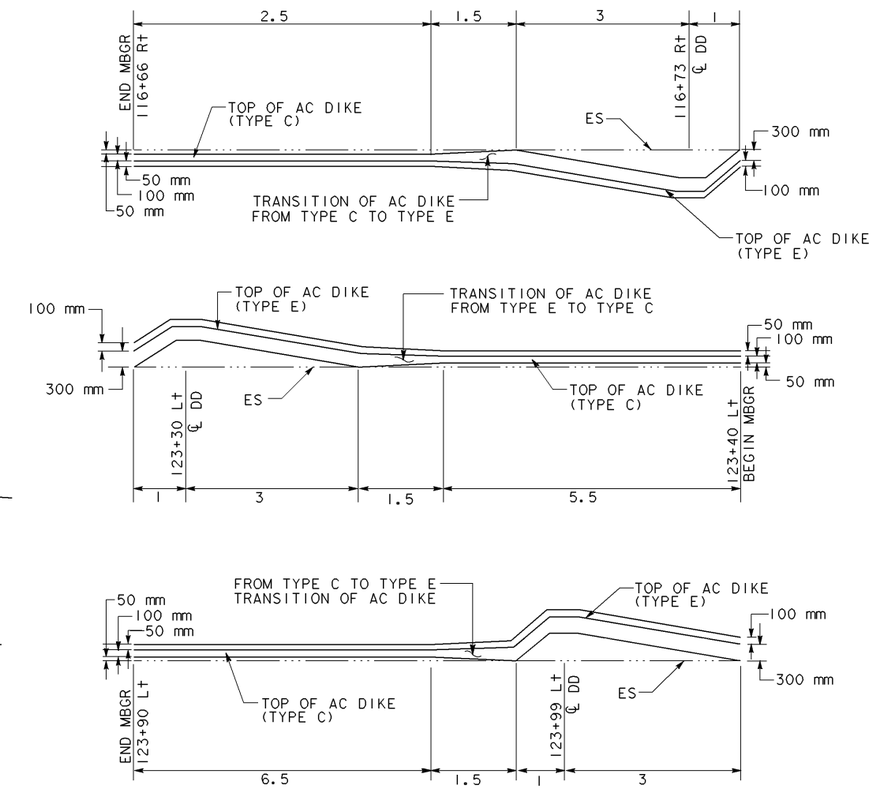

DIKE TRANSITION DETAILS
NO SCALE

ALL DIMENSIONS ARE IN
METERS UNLESS OTHERWISE SHOWN

CONSTRUCTION DETAILS
SCALE AS SHOWN

C-1

DIST	COUNTY	ROUTE	KILOMETER POST TOTAL PROJECT	SHEET No	TOTAL SHEETS

REGISTERED CIVIL ENGINEER

PLANS APPROVAL DATE

REGISTERED PROFESSIONAL ENGINEER NO. EXP. CIVIL STATE OF CALIFORNIA

The State of California or its officers or agents shall not be responsible for the accuracy or completeness of electronic copies of this plan sheet.

Caltrans now has a web site! To get to the web site, go to: http://www.dot.ca.gov

Caltrans Metric

DATE	REVISED BY	DATE REVISED

CALCULATED/DESIGNED BY

CHECKED BY

PROJECT ENGINEER

STATE OF CALIFORNIA - DEPARTMENT OF TRANSPORTATION

Caltrans

DESIGN

LAST REVISION 04-02-01

DATE PLOTTED => 10-APR-2001
TIME PLOTTED => 09:03

FOR REDUCED PLANS ORIGINAL SCALE IS IN MILLIMETERS 0 20 40 60 80

USERNAME => trmikesi
DGN FILE => dpm2_094.dgn

CU 00000

EA 000000

Return to Section 2 Table of Contents

2-2.6 Temporary Water Pollution Control Plans and Details

Detail sheets which show Best Management Practices (BMP) for Temporary Water Pollution should be considered for inclusion in the Project Plans. When details and quantities are included in the Project Plans, layout information, depicting location and placement of the BMP's, is to be shown on the stormwater information handout. Use of a 1:500 scale will typically be appropriate for these layouts. These Layout Sheets are not part of the contract plans, and should be handled similar to Cross Sections. See Section 2-2.25.

Temporary control features may include, but are not limited to, silt fences, check dams, drainage inlet protection, and drainage outlet protection.

2-2.7 Contour Grading Plans

Contour Grading Plan Sheets indicate the configuration of embankments and cuts when the shapes of these items are variable, warped, or complex.

Roadways with centerline stationing, contours of grading (existing and proposed), slope lines, and benching are to be shown. Pavement elevations may be shown.

Existing contours shall appear as dropouts in the background. New contour grading shall be shown as solid lines. Index contours are shown as a heavy line and shall be labeled with their elevations. See Table 2-1.3A in Section 2-1.3 of this manual.

On large complex projects, contour grading shall be shown on separate sheets. Contour grading, when minimal, may be shown on layout plan sheets where the addition of the contour grading to such sheets will not produce sheets which are cluttered, unreadable, or confusing.

Each sheet of the Contour Grading Plans shall have the following note included on them: “This plan accurate for Contour Grading work only.”

DIST	COUNTY	ROUTE	KILOMETER POST TOTAL PROJECT	SHEET No	TOTAL SHEETS

REGISTERED CIVIL ENGINEER

PLANS APPROVAL DATE

REGISTERED PROFESSIONAL ENGINEER No. Exp. CIVIL STATE OF CALIFORNIA

The State of California or its officers or agents shall not be responsible for the accuracy or completeness of electronic copies of this plan sheet.

Caltrans now has a web site! To get to the web site, go to: http://www.dot.ca.gov

Caltrans Metric

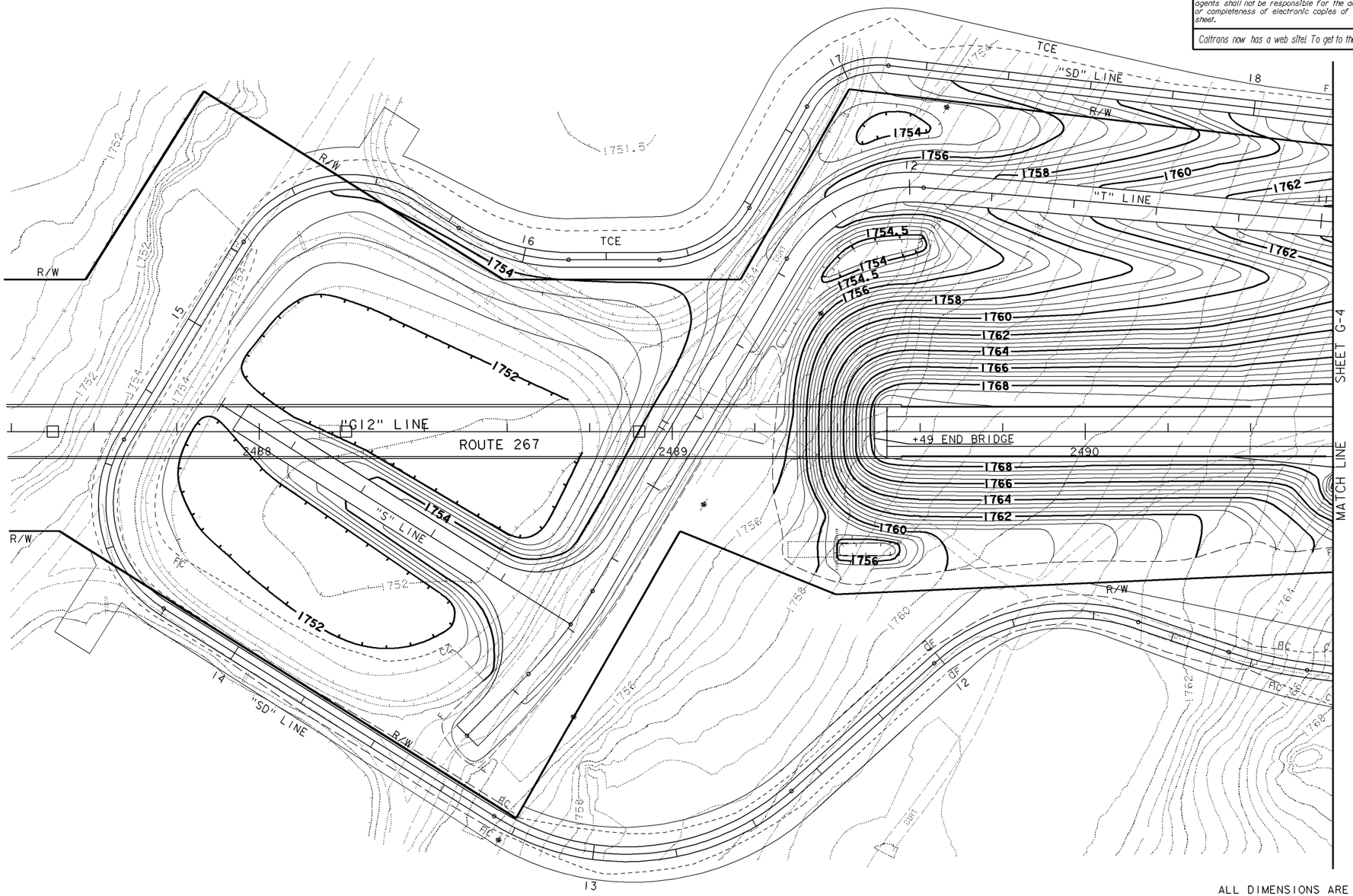

THIS PLAN ACCURATE FOR CONTOUR GRADING WORK ONLY.

ALL DIMENSIONS ARE IN METERS UNLESS OTHERWISE SHOWN

CONTOUR GRADING

SCALE 1:500

G-1

DATE	REVISED BY
	DATE REVISED

CALCULATED/DESIGNED BY

CHECKED BY

PROJECT ENGINEER

STATE OF CALIFORNIA - DEPARTMENT OF TRANSPORTATION

Caltrans **DESIGN**

LAST REVISION 04-02-01

DATE PLOTTED => 10-APR-2001
TIME PLOTTED => 09:03

FOR REDUCED PLANS ORIGINAL SCALE IS IN MILLIMETERS 0 20 40 60 80

USERNAME => trmikesi
DGN FILE => dpm2_099.dgn

CU 00000 EA 000000

Return to Section 2 Table of Contents

Return to Section 2 Table of Contents

(Blank)

2-2.8 Drainage Plans

Drainage plans should show layout and location of drainage facilities. Existing facilities shall appear as dropouts in the background. The proposed drainage work shall be shown as solid lines. Indicate what work is to be performed on existing facilities, such as "Abandon" or "Remove". The words "Construct", "Place", etc., for new construction are superfluous.

The following data is to be given for each pipe culvert, box culvert, etc., for each drainage system:

(a) Size

(b) Type

(c) Location (station pluses)

The station reference used for a drainage system is the point at which the culvert crosses or intersects the roadway centerline or profile grade.

Each drainage system shall be identified by number, and each element of the system shall be assigned a drainage unit designation, e.g.,

Drainage System No. 1

Drainage Unit a, b, etc.

A drainage system may consist of a single culvert with no appurtenances or may be a complex system consisting of several culverts and appurtenances feeding into a main culvert.

A Drainage System Number shall be assigned to each drainage system on the project where work is to be performed. The system numbering and units shall be consecutive throughout the project. System numbering should not start and stop for each individual sheet of drainage plans.

The drainage system number and unit designation shall correspond with those shown on the Drainage Profiles, Drainage Details and Drainage Quantities.

Indicate ditches by standard symbols with arrowheads to show direction of flow. Flow arrows are often helpful at inlet and outlet structures.

Subsurface drainage such as underdrains, horizontal drains, edge drains, and subgrade drains may be shown on the Drainage Plan Sheets. Where subsurface drainage systems are large and complex, they may require preparation of separate sheets of plans. Edge drain outlets and vents should connect to drainage facilities, such as drainage inlets, drainage pipes, and overside drains, whenever possible. If such features are not available, the Standard Plans show various methods to handle edge drain outlets, vents, and cleanouts. The type of edge drain outlets, vents, and cleanouts shall be shown on the project plans. Subsurface drainage items should be summarized on a separate quantity list and should not normally be shown on the drainage quantity list specified under Section 2-2.11 of this manual. The quantity list of subsurface drainage items such as edge drains may require separate summary sheets, otherwise they may be listed on the Summary of Quantities sheet.

A list of abbreviations and symbols with their meanings should be included on the first sheet of the drainage plans. Do not duplicate abbreviations shown on Standard Plan Sheet A10A.

Each sheet of the Drainage Plans shall have the following note included on them: "This plan accurate for Drainage work only."

Return to Section 2 Table of Contents, page 2-105, page 2-113

DIST	COUNTY	ROUTE	KILOMETER POST TOTAL PROJECT	SHEET No	TOTAL SHEETS

REGISTERED CIVIL ENGINEER

PLANS APPROVAL DATE

REGISTERED PROFESSIONAL ENGINEER No. Exp. CIVIL STATE OF CALIFORNIA

The State of California or its officers or agents shall not be responsible for the accuracy or completeness of electronic copies of this plan sheet.

Caltrans now has a web site! To get to the web site, go to: http://www.dot.ca.gov

Caltrans Metric

NOTE:

THE 2-900 mm RCP (80 m LONG) SHALL BE PLACED IN THE EXISTING DITCH WITH CONSTANT SLOPE OF 0.001 METER/METER. REGRADE EXISTING DITCH TO OBTAIN A SMOOTH PROFILE BEFORE PIPE INSTALLATION.

ABBREVIATIONS:

GLD - GRATED LINE DRAIN
ACOD - ASPHALT CONCRETE OVERSIDE DRAIN
CHK - CHECKERED

SECTION B-B
NO SCALE

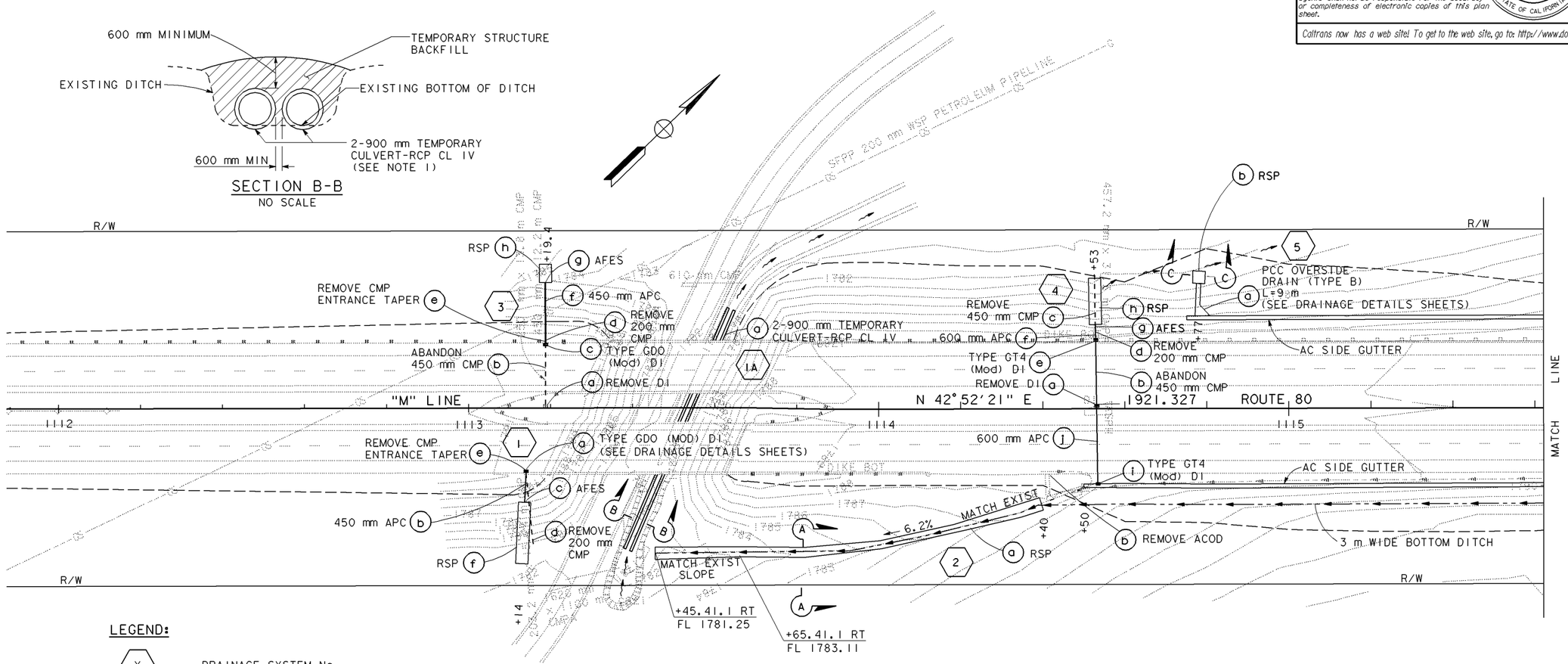

LEGEND:

(X) DRAINAGE SYSTEM No.

DRAINAGE UNIT No.

RSP

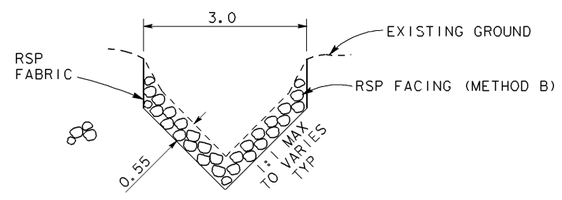

SECTION A-A
NO SCALE

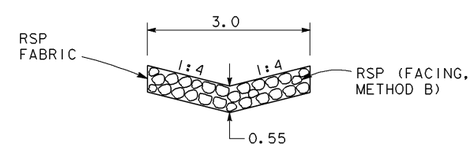

SECTION C-C
NO SCALE

ALL DIMENSIONS ARE IN METERS UNLESS OTHERWISE SHOWN

DRAINAGE PLAN

NO SCALE

D-1

THIS PLAN ACCURATE FOR DRAINAGE WORK ONLY.

STATE OF CALIFORNIA - DEPARTMENT OF TRANSPORTATION
Caltrans
PROJECT DEVELOPMENT

PROJECT ENGINEER | CALCULATED/DESIGNED BY | CHECKED BY | REVISED BY | DATE REVISED | DATE

LAST REVISION 04-02-01 | DATE PLOTTED => 10-APR-2001 TIME PLOTTED => 09:03

FOR REDUCED PLANS ORIGINAL SCALE IS IN MILLIMETERS 0 20 40 60 80

USERNAME => trm1kesl
DGN FILE => dpm2_103.dgn

CU 00000 | EA 000000

Return to Section 2 Table of Contents

Return to Section 2 Table of Contents

(Blank)

2-2.9 Drainage Profiles

Where drainage facilities are to be installed, constructed or removed, drainage profiles shall be prepared for inclusion in the plans.

A profile of each proposed drainage system shall be plotted on the Drainage Profile Sheets. Drainage profiles are required so that they will allow the quantity of excavation and backfill to be determined which is needed to install or construct the system or remove a drainage facility. Excavation and backfill is included in the price paid for each item of work to install, construct or remove a drainage facility.

Each Drainage Profile Sheet shall contain the following data for each drainage system:

(a) Type, size, length, and location of culverts.

(b) Culvert appurtenances (including, but not limited to, headwalls, wingwalls, drainage inlets, flared end sections, inlet and outlet structures) shall be shown and labeled.

(c) Existing groundline profile and finished grade.

(d) All flow line elevations. The slope of the culvert may also be shown by percentage.

(e) Drainage System Number and Unit Designation (See Section 2-2.8). Drainage system number and unit designation must correspond with drainage plan sheets and quantities summary sheets.

The length of pipe culvert for each individual Drainage Unit shown on the drainage profile sheet should be:

(1) The estimated length of the pipe required expressed to the nearest 0.1 m for culverts between successive drainage structures (inlets, junction boxes, etc.), and

(2) The estimated length of the pipe required rounded up to the nearest 0.5 m increment of pipe where the culvert is not between successive drainage structures (inlets, junction boxes, etc.).

The length of pipe culvert for each individual Drainage Unit shown on the drainage quantity sheet shall be the same estimated pipe length shown on the drainage profile.

DIST	COUNTY	ROUTE	KILOMETER POST TOTAL PROJECT	SHEET NO	TOTAL SHEETS

REGISTERED CIVIL ENGINEER

PLANS APPROVAL DATE

REGISTERED PROFESSIONAL ENGINEER No. EXP. CIVIL STATE OF CALIFORNIA

The State of California or its officers or agents shall not be responsible for the accuracy or completeness of electronic copies of this plan sheet.

Caltrans now has a web site! To get to the web site, go to: http://www.dot.ca.gov

Caltrans Metric

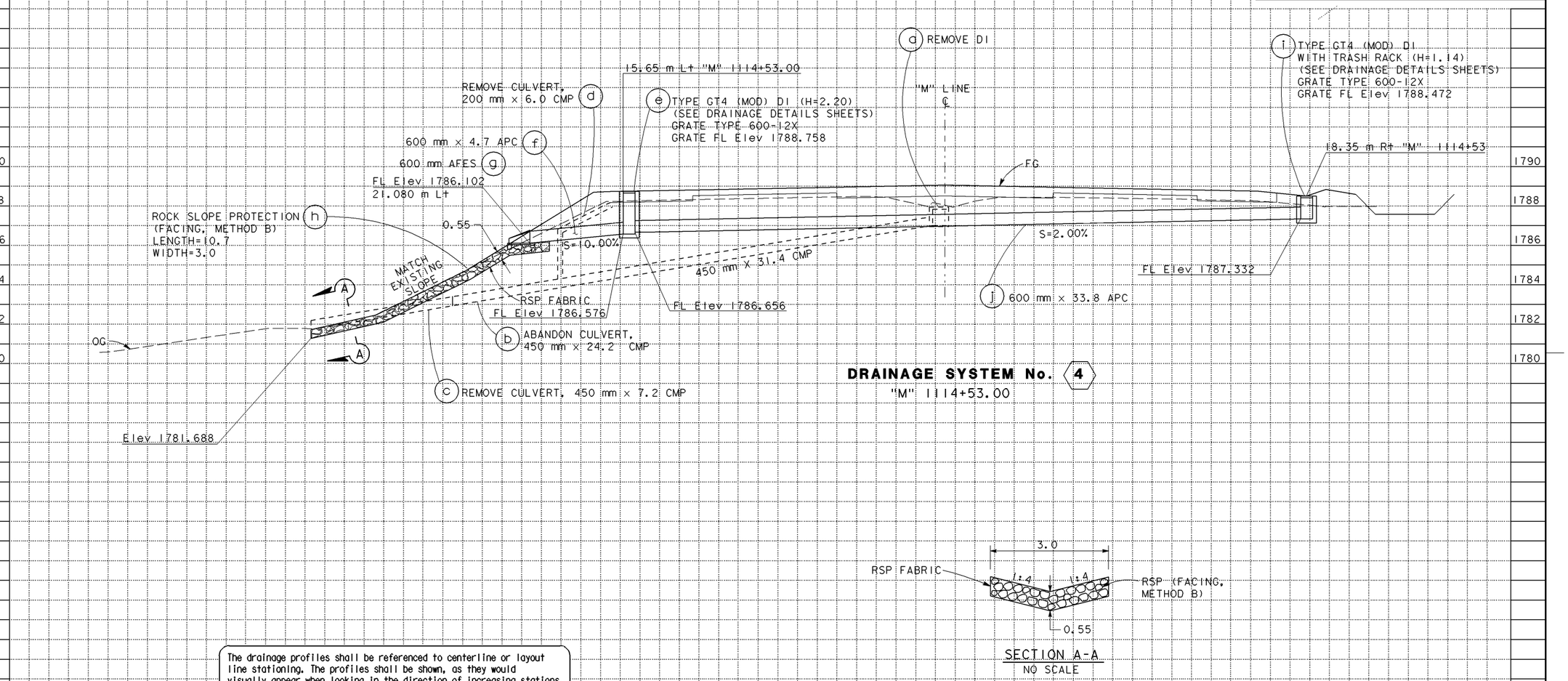

DRAINAGE SYSTEM No. 4
"M" 1114+53.00

SECTION A-A
NO SCALE

The drainage profiles shall be referenced to centerline or layout line stationing. The profiles shall be shown, as they would visually appear when looking in the direction of increasing stations.

ALL DIMENSIONS ARE IN METERS UNLESS OTHERWISE SHOWN

DRAINAGE PROFILE

SCALE 1:100 Horiz
1:100 Vert

D-55

Station	
m^3	Exc
	Emb

STATE OF CALIFORNIA - DEPARTMENT OF TRANSPORTATION
Caltrans PROJECT DEVELOPMENT

PROJECT ENGINEER

CALCULATED/DESIGNED BY | CHECKED BY

DATE REVISED BY | DATE REVISED

LAST REVISION 04-02-01 | DATE PLOTTED => 10-APR-2001 | TIME PLOTTED => 09:03

FOR REDUCED PLANS ORIGINAL SCALE IS IN MILLIMETERS 0 20 40 60 80

USERNAME => trmikesl
DGN FILE => dpm2_107.dgn

CU 00000 | EA 000000

Return to Section 2 Table of Contents

Return to Section 2 Table of Contents

(Blank)

2-2.10 Drainage Details

The details shown on the Drainage Detail Sheets are unique to a specific project and those for which there are no Standard Plans. They usually depict special drainage structures, channel changes, modifications to existing structures, etc.

Drainage Detail Sheets should not be confused with Drainage Plan Sheets. Drainage Plan Sheets show layouts of drainage systems.

Drainage details which are applicable to a specific Drainage System should be identified on the Drainage Detail Sheet by the corresponding Drainage System Number and Unit Designation. Drainage system number and unit designation must correspond with drainage plan sheets and quantities summary sheets.

Return to Section 2 Table of Contents

DIST	COUNTY	ROUTE	KILOMETER POST TOTAL PROJECT	SHEET No	TOTAL SHEETS

REGISTERED CIVIL ENGINEER

PLANS APPROVAL DATE

REGISTERED PROFESSIONAL ENGINEER No. Exp. CIVIL STATE OF CALIFORNIA

The State of California or its officers or agents shall not be responsible for the accuracy or completeness of electronic copies of this plan sheet.

Caltrans now has a web site! To get to the web site, go to: http://www.dot.ca.gov

Caltrans Metric

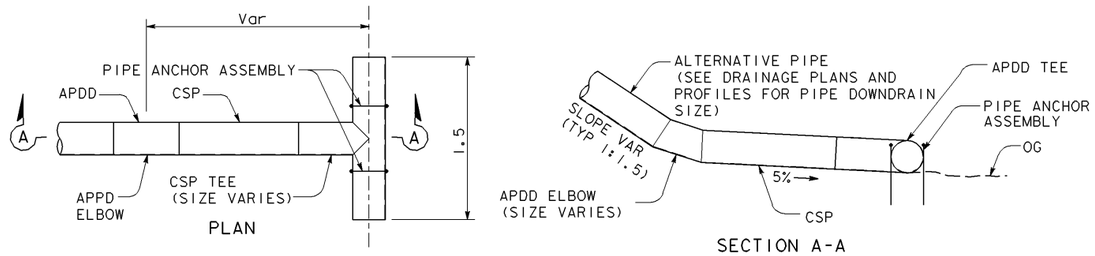

APDD TEE ENERGY DISSIPATOR
DRAINAGE SYSTEM No.

130 147 156 167 168 169

NOTES:

1. SIZES VARY PER DRAINAGE SYSTEM. SEE DRAINAGE PLANS AND PROFILE FOR SIZES AND DIMENSIONS.
2. APDD TEE AND ELBOW SIZE TO MATCH CSP DOWNDRAIN SIZE.

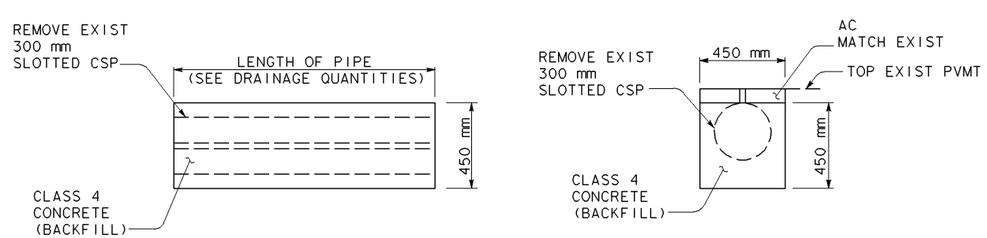

REMOVE SLOTTED PIPE
DRAINAGE SYSTEM No.

137 140 144 149 155 158 164 166 171

ALL DIMENSIONS ARE IN METERS UNLESS OTHERWISE SHOWN

DRAINAGE DETAILS

NO SCALE

D-96

DATE	REVISED BY	DATE REVISED

CALCULATED/DESIGNED BY

CHECKED BY

PROJECT ENGINEER

STATE OF CALIFORNIA - DEPARTMENT OF TRANSPORTATION

Caltrans DESIGN

LAST REVISION 04-02-01 | DATE PLOTTED => 10-APR-2001 TIME PLOTTED => 09:03

FOR REDUCED PLANS ORIGINAL SCALE IS IN MILLIMETERS 0 20 40 60 80

USERNAME => trmikesl
DGN FILE => dpm2_111.dgn

CU 00000 EA 000000

Return to Section 2 Table of Contents

DIST	COUNTY	ROUTE	KILOMETER POST TOTAL PROJECT	SHEET No	TOTAL SHEETS

REGISTERED CIVIL ENGINEER

PLANS APPROVAL DATE

REGISTERED PROFESSIONAL ENGINEER NO. EXP. CIVIL STATE OF CALIFORNIA

The State of California or its officers or agents shall not be responsible for the accuracy or completeness of electronic copies of this plan sheet.

Caltrans now has a web site! To get to the web site, go to: http://www.dot.ca.gov

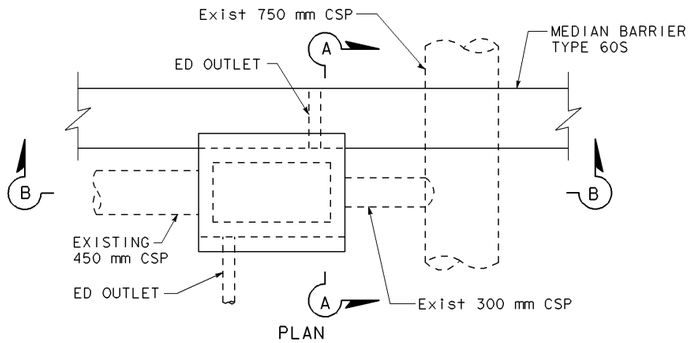

PLAN

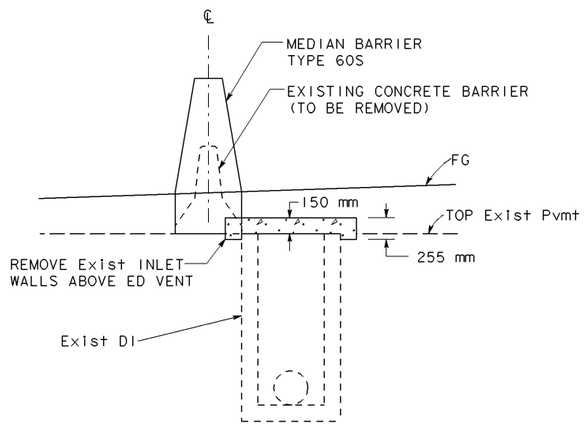

SECTION A-A

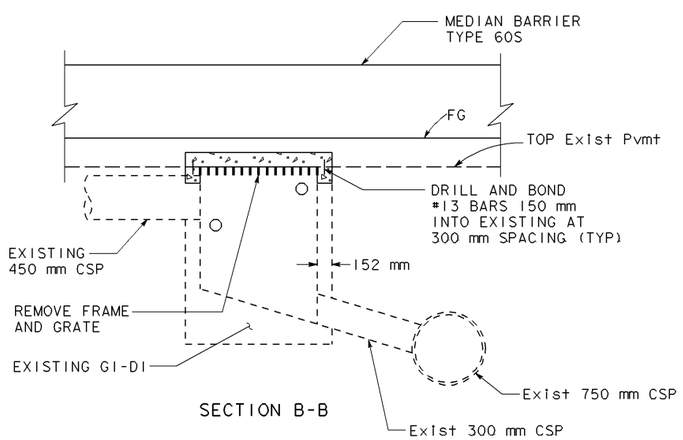

SECTION B-B

CAP INLET

SYSTEM No.	STATION
165	"D"83+60.40

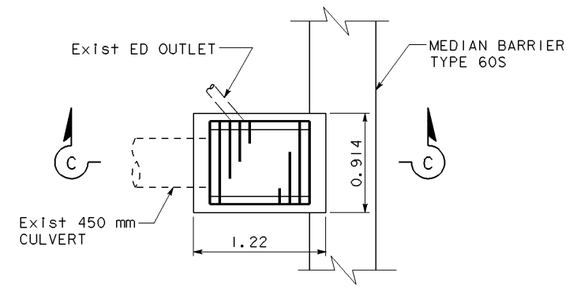

PLAN

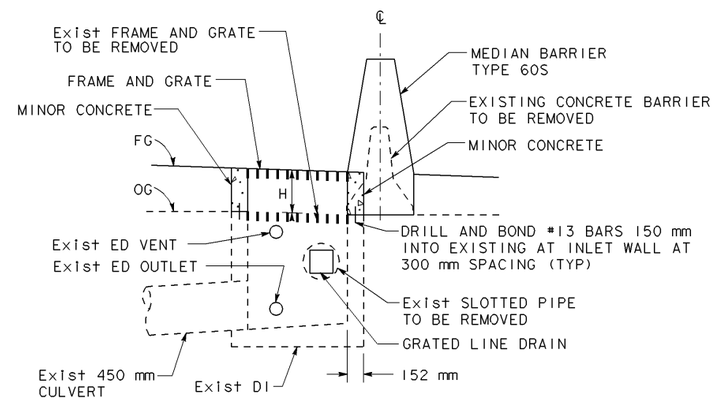

SECTION C-C

ADJUST INLET

SYSTEM No.	STATION	H
155	"D"72+13.83	0.45
181	"D"97+21.00	0.37

ALL DIMENSIONS ARE IN METERS UNLESS OTHERWISE SHOWN

DRAINAGE DETAILS

NO SCALE

D-99

DATE	REVISED BY	DATE REVISED

CALCULATED/DESIGNED BY

CHECKED BY

PROJECT ENGINEER

STATE OF CALIFORNIA - DEPARTMENT OF TRANSPORTATION

DESIGN

LAST REVISION 04-02-01

DATE PLOTTED => 10-APR-2001
TIME PLOTTED => 09:03

FOR REDUCED PLANS ORIGINAL SCALE IS IN MILLIMETERS 0 20 40 60 80

USERNAME => trmikesi
DGN FILE => dpm2_112.dgn

CU 00000

EA 000000

Return to Section 2 Table of Contents

2-2.11 Drainage Quantities

This sheet consists of a summary of drainage facilities and appurtenances, which are to be constructed, installed, removed, reset, remodeled, adjusted, relaid, modified, abandoned, reconstructed, or salvaged.

Drainage facilities shall be referenced on the Drainage Quantities Sheet by station and by Drainage System Number and Unit Designation. Where sufficient space is available on the sheet the Drainage System Number and Unit Designation may appear on both edges of the sheet. Station, Drainage System Number and Unit Designation shall be the last columns on the right edge of the sheet. See the drainage quantities sample sheet.

The station reference used for a drainage system is the point at which the culvert crosses or intersects the roadway centerline or profile grade. Appurtenances for these culverts shall be entered under the same station as the culvert regardless of the skew or distance from centerline. Where culverts are installed in the median or in roadside areas approximately parallel with the roadbed, as a separate system, they shall be referenced to roadway centerline at each end of the culvert or to the associated appurtenance at the end of the culvert, such as drainage inlets. Downdrains shall be referenced to the nearest centerline station. Station references shall match those shown on the Drainage Plan Sheet and Drainage Profile Sheet.

See Section 2-2.8 of this manual for definition and usage of Drainage System Numbers and Unit Designation. Drainage System Number and Unit designation must correspond with drainage plan sheets and drainage profile sheets.

A description column shall be provided on the Drainage Quantities Sheet showing name, size, type, or classification of all units of each drainage system.

Units of the system which require separate calculations for pay quantities, such as headwalls and drainage inlets, shall be shown on separate lines. Culvert appurtenances such as elbows, which do not require a calculation, may be shown on the same line as the culvert. Inlet and outlet appurtenances for a culvert should be listed immediately above or below the associated culvert. A space shall be provided between separate drainage systems.

A separate column shall be shown for pipe culvert joint classification (standard, positive, or downdrain). Where situations dictate watertightness for joints other than the downdrain type, a note should be added to the list indicating which joints are to be made watertight.

A separate column shall be provided on the list as “Height of Inlet”. This is the ‘H’ dimension of drainage inlets as depicted on the Standard Plans for drainage inlets. The dimension to be included in the “Height of Inlet” column shall be the calculated height rounded to the nearest 0.02 m increment.

A separate column shall be provided on the list as “maximum cover” which indicates the maximum cover over each length of circular reinforced concrete pipe culvert (or alternative pipe culvert where circular reinforced concrete pipe is allowable alternative pipe material option). Cover is defined as the maximum vertical distance from the top of pipe to finished grade. The maximum height of cover shall be shown to the nearest 0.1 m, since the class of reinforced concrete pipe to be installed depends on the method of excavation and backfill, and the limits of cover as set forth in the Standard Plans.

Columns shall be provided for all drainage facilities, which are, pay items. Items of like or related nature are grouped together to facilitate checking and for ready reference. The column headings for pay items shall read the same as the description for the pay item shown in the Engineer’s Estimate.

Separate columns shall be provided for each size and type of pipe culvert. Circular reinforced concrete pipe shall be shown by size only, where the method of excavation and backfill shown on the Standard Plans will apply. In such cases, the contractor will select the class of circular reinforced concrete pipe. Where circular reinforced concrete pipe is to be installed by other methods, the size and class of the associated length of circular reinforced concrete pipe shall be shown in the column headings. Oval shaped reinforced concrete pipe and reinforced concrete pipe arch shall be shown by size and class. Corrugated metal pipe culvert (steel or aluminum) shall be shown by size of pipe, wall thickness, and

Return to Section 2 Table of Contents, page 2-101, page 2-165

corrugation type (annular and/or helical). Where metal pipes require bituminous coating, lining, or invert paving, show them as such in the column heading for the pipe culverts involved.

The length of pipe culvert for each individual Drainage Unit shown on the drainage quantities sheet shall be the same estimated length of the pipe shown on the drainage profile.

Where two or more pipe materials meet the physical standards and hydraulic requirements for a culvert, the culvert shall be identified as alternative pipe culvert. A table of allowable pipe materials for alternative pipe culvert, similar to Table 2-2.11 shown herein, designating the type of material, size, class (when applicable), thickness, and protection shall be shown on the first sheet of the Drainage Quantities. Refer to Topic 853.3 of the Highway Design Manual.

When there are two or more sets of allowable pipe materials for alternative pipe of the same nominal size or hydraulic capacity, the pipe culvert shall be designated as alternative pipe culvert (APC) Type A, Type B, etc. Two such examples of this situation are shown in Table 2-2.11:

(1) 450 mm APC (Type A), 450 mm APC (Type B).

and

(2) 900 mm APC (Type A), 900 mm APC (Type B).

When there is only one set of allowable pipe materials for alternative pipe culvert of the same nominal size or hydraulic capacity, the type of alternative pipe culvert shall not be designated. Examples of this situation are shown in Table 2-2.11 for 600 mm APC.

TABLE 2-2.11

ALTERNATIVE PIPE CULVERTS									
ALLOWABLE PIPE MATERIAL AND PROTECTION									
DESIGNATION	RCP	CSP				CAP			
	Size (mm)	Size (mm)	Thick (mm)	Bitum. Coat	Bitum. Paved Invert	Size (mm)	Thick (mm)	Bitum. Coat	Bitum. Paved Invert
450 mm APC (TYPE A)	450	450*	1.63	NO	NO	450*	1.5	NO	NO
450 mm APC (TYPE B)	450	600*	1.63	YES	NO	600*	1.5	NO	NO
600 mm APC	600	750*	2.01	YES	YES	—-	——	—-	—-
900 mm APC (TYPE A)	900	1050*	2.77	YES	YES	1050*	3.4	NO	NO
900 mm APC (TYPE B)	900	900*	2.01	YES	NO	900*	2.7	NO	NO

Note: 900 mm Alternative Pipe Inlets and 900 mm Alternative Pipe Risers used with the alternative pipe culverts shown in this table shall be either Precast Concrete Pipe or Corrugated Steel Pipe (1.63 mm thick).

* Either helical or annular corrugations are allowable.

Return to Section 2 Table of Contents, page 2-101, page 2-165

Structure excavation, structure backfill, and culvert beddings required for installation of culverts shall not be shown on the Drainage Quantities Sheet. These items are not paid for separately. They are included in the price paid per meter for the culvert.

Structure excavation, structure backfill, and pervious backfill required for construction of all culvert headwalls, endwalls, and wingwalls shall not be shown on the drainage list, since the items are not paid for separately. The items of structure excavation, structure backfill and pervious backfill are included in the price paid per cubic meter for the concrete to construct such facilities.

Pipe inlets and pipe risers shall be shown under separate columns for the size, type, and thickness (where applicable). The dimension shown in the entries for the individual pay lengths shall be the 'H' dimension expressed to the nearest 0.02 m. Concrete bases for pipe inlets and pipe risers are usually paid for by the cubic meter as minor concrete (minor structure). The quantities for the concrete bases shall be listed under the column heading of "Minor Concrete (Minor Structure)". Quantities of minor concrete (minor structure) shall be shown to the nearest 0.01m^3.

Concrete drainage inlets such as those shown on Standard Plans D72 and D73; and pipe headwalls as shown on Standard Plan D89 are usually paid for by the cubic meter as minor concrete (minor structure). The quantities for such shall be listed under the column heading of "Minor Concrete (Minor Structure)". Quantities of minor concrete (minor structure) shall be shown to the nearest 0.01 m^3.

Frames, grates, and covers for drainage inlets (both concrete and pipe inlets) are normally paid for by the kilogram as miscellaneous iron and steel. A separate column should be used for the item of miscellaneous iron and steel. The type of grate may be shown in a separate column or may be referred to in the description column.

Cast-in-place reinforced concrete box culverts and any associated headwalls, wingwalls, endwalls, and warped wingwalls are paid for by the cubic meter of concrete (usually Class 1 concrete) and by the kilogram for bar reinforcing steel required for construction of such facilities.

Precast reinforced concrete box culverts are paid for by length (meter).

Headwalls, endwalls, and warped wingwalls for pipe culverts 1500 mm and greater in diameter are paid for in the same manner as wingwalls for concrete box culverts.

Separate columns for Class 1 concrete (structure) and bar reinforcing steel shall be used when box culverts, concrete arch culverts, and headwalls, endwalls, or warped wingwalls for large diameter pipe culverts are to be constructed. When conditions require isolation of quantities for construction of specific structures, the column headings and items of work may be more specialized [for example: Class 1 concrete (box culvert) and bar reinforcing steel (box culvert) for box culvert construction].

Separate columns shall be used for the various existing drainage facilities, which are to be removed, reset, remodeled, adjusted, relaid, modified, abandoned, reconstructed, or salvaged. Remodeling, adjusting, or modifying existing concrete drainage inlets may be paid for by the cubic meter of minor concrete (minor structure) necessary to perform the work involved or may be paid for by the unit (each).

Separate columns are used for such items as flared end sections, pipe downdrains, downdrain slip joints, downdrain anchors, entrance tapers, rock slope protection, and concrete used for slope protection, gutter lining, ditch lining, and channel lining. Such concrete is not be designated by class or as minor concrete in the Engineer's Estimate or on the plans.

Certain pay items such as "minor concrete (minor structure)" and "miscellaneous iron and steel" are usually designated as final pay quantities. Final pay quantities are to be designated on the Engineer's Estimate using (F) or (S-F) as appropriate for the item involved. Do not identify final pay items on the plans.

Return to Section 2 Table of Contents, page 2-101, page 2-165

Items of work shown in the columns which are not a separate pay item, but are included in other items of work, should be indicated with the symbol "(N)" in the column heading for such items and by adding the following note to the sheet:

(N) = Not a separate pay item, for information only.

Where the Drainage Quantities consists of one sheet, quantity totals for each pay item column shall appear at the bottom of the sheet. Where the Drainage Quantities consists of more than one sheet, sheet totals shall be shown as subtotal at the bottom of each individual sheet and the project totals for each pay item column shall appear on the last sheet of the Drainage Quantities.

Notes

Return to Section 2 Table of Contents, page 2-101, page 2-165

ABBREVIATIONS

ACOD ASPHALT CONCRETE OVERSIDE DRAIN
APDD ALTERNATIVE PIPE DOWNDRAIN
GLD GRATED LINE DRAIN
OSD OVERSIDE DRAIN
(N) NOT A SEPARATE PAY ITEM, FOR INFORMATION ONLY

NOTES:

1. SEE MISCELLANEOUS DRAINAGE QUANTITIES SHEETS FOR ADDITIONAL PIPE DRAINAGE QUANTITIES.
2. FOR ALLOWABLE ALTERNATIVES FOR APC, AFES & APDD, SEE MISCELLANEOUS DRAINAGE QUANTITIES SHEET.
3. EXCEPT FOR PIPE DOWNDRAINS WHICH REQUIRE WATER TIGHT JOINTS, ALL JOINTS ARE STANDARD JOINT TYPE.

Caltrans Metric

DIST	COUNTY	ROUTE	KILOMETER POST TOTAL PROJECT	SHEET No	TOTAL SHEETS

REGISTERED CIVIL ENGINEER

PLANS APPROVAL DATE

REGISTERED PROFESSIONAL ENGINEER NO. EXP. CIVIL STATE OF CALIFORNIA

The State of California or its officers or agents shall not be responsible for the accuracy or completeness of electronic copies of this plan sheet.

Caltrans now has a web site! To get to the web site, go to: http://www.dot.ca.gov

DRAINAGE QUANTITIES

DRAINAGE PLAN SHEET No.	DRAINAGE SYSTEM No. ⬡	DRAINAGE UNIT No. ○	MISC IRON AND STEEL	ASPHALT CONCRETE (TYPE A)	REMOVE DOWNDRAIN	REMOVE ACOD	(N) PIPE ELBOW	APDD 600 mm	APDD 450 mm	REMOVE ENTRANCE TAPER	450 mm ENTRANCE TAPER	REMOVE FES	AFES 1200 mm	AFES 900 mm	AFES 750 mm	AFES 600 mm	AFES 450 mm	CAP INLET	ADJUST INLET	REMOVE INLET	(N) REMOVE FRAME & GRATE	(N) MAXIMUM COVER	(N) HEIGHT OF INLET "H"	MINOR CONCRETE (MINOR STRUCTURE)	ABANDON CULVERT	REMOVE CULVERT	APC 600 mm	APC 450 mm	(N) FRAME & GRATE	PLACE ASPHALT CONCRETE (MISCELLANEOUS AREA)	RSP (FACING, METHOD B)	RSP FABRIC	DESCRIPTION	STATION	DRAINAGE PLAN SHEET No.	DRAINAGE SYSTEM No. ⬡	DRAINAGE UNIT No. ○
			kg	tonne	m	EA	EA	m	m	EA	EA	EA	EA	EA	EA	EA	EA	EA	EA	EA	EA	m	m	m³	m	m	m	m	EA	m²	m³	m²					
D-1	1	a	215																					3.12					2				MOD GDO-D1 GRATE TYPE 600-12X	"M" 1113+14.00	D-1	1	a
		b																				3.0						7.2					450 mm APC				b
		c															1																450 mm AFES				c
		d			17.5																	1.0											REMOVE 200 mm CMP DD				d
		e								1																							REMOVE 200 mm CMP ENTRANCE TAPER				e
	1	f																													22.3	55.4	RSP (FACING, METHOD B) 13.5 X 3.0 X 0.5			1	f
D-1	1A	a																				SEE MISCELLANEOUS DRAINAGE QUANTITIES SHEETS											2-900 mm X 80 TEMPORARY CULVERT	"M" 1113+53.50	D-1	1A	a
D-1	2	a																													17.3	43.1	RSP (FACING, METHOD B) 105.0 X 3.0 X 0.5	"M" 1114+52.00	D-1	2	a
	2	b				1																											REMOVE ACOD			2	b
D-1	3	a																		1		2.3											REMOVE D1 (H=2.0)	"M" 1113+19.40	D-1	3	a
		b																					2.40		17.8								ABANDON CULVERT, 450 mm CMP				b
		c	215																					3.12					2				MOD GDO-D1, GRATE TYPE 600-12X				c
		d								1												2.5											REMOVE 200 mm CMP ENTRANCE TAPER				d
		e																				2.6				15.0							REMOVE CULVERT, 450 mm CMP				e
		f																										12.0					450 mm APC				f
		g															1																450 mm AFES				g
	3	h																													7.4	18.5	RSP (FACING, METHOD B) 4.5 X 3.0 X 0.5			3	h
D-1	4	a																		1		4.0											REMOVE D1 (H=2.0)	"M" 1114+53.00	D-1	4	a
		b																				3.2			24.2								ABANDON CULVERT, 450 mm CMP				b
		c																				0.2				7.2							REMOVE CULVERT, 450 mm CMP				c
		d																					2.20			6.0							REMOVE CULVERT, 200 mm CMP				d
		e	217																			2.4		2.86					2				MOD GT4-D1, GRATE TYPE 600-12X				e
		f																									4.7						600 mm APC				f
		g														1																	600 mm AFES				g
		h																					1.14								17.1	42.3	RSP (FACING METHOD B) 10.7 x 3.0 x 0.5				h
		i	217																			2.1		1.83					2				MOD GT4-D1, GRATE TYPE 600-12X				i
	4	j																									33.8						600 mm APC			4	j
D-1	5	a																						5.14									PCC OSD (TYPE B) L=9.0	"M" 1114+77.00	D-1	5	a
	5	b																													5.0	12.3	RSP (FACING, METHOD B) 3.0 x 3.0 x 0.5			5	b
			864		17.5	1				2						1	2			2				16.07	42.0	28.2	38.5	19.2	8		69.1	171.6	TOTAL				

DRAINAGE QUANTITIES

D-129

STATE OF CALIFORNIA - DEPARTMENT OF TRANSPORTATION
Caltrans DESIGN

PROJECT ENGINEER

CALCULATED/DESIGNED BY | CHECKED BY | DATE REVISED BY | DATE REVISED

LAST REVISION 04-02-01 | DATE PLOTTED => 10-APR-2001 TIME PLOTTED => 09:03

FOR REDUCED PLANS ORIGINAL SCALE IS IN MILLIMETERS 0 20 40 60 80

USERNAME => trmikesl
DGN FILE => dpm2_117.dgn

CU 00000 EA 000000

Return to Section 2 Table of Contents

Return to Section 2 Table of Contents

(Blank)

2-2.12 Sanitary Sewer Plans, Profiles, Details, and Quantities

Where extensive or complex sewer work is to be performed as contract work, separate Sewer Plan Sheets shall be included in the project plans.

Existing sewer facilities shall appear as dropouts in the background. Proposed sewer work shall be shown as solid lines. Indicate what work is to be performed on existing facilities such as “Remove,” “Relocate,” or “Abandon”.

Clearly define sewer work as to which is to be done by our contractor and which is to be done by others.

Where new sewer lines are to be constructed as contract items, profiles along such lines shall be included in the plans.

Where a large number of sewer details are to be included or where a large number of sewer pay items are involved, separate sheets should be prepared to show sewer details and sewer quantities. Do not add sewer details or the sewer quantity list to the sewer plan (layout) sheet where such addition would produce sheets that are cluttered, unreadable, or confusing.

When final pay items are included in the sanitary sewer quantities, the final pay quantities are to be designated on the Engineer’s Estimate using (F) or (S-F) as appropriate for the item involved. Do not identify final pay items on the plans.

Each sheet of the Sewer Plans shall have the following note included on them: “This plan accurate for Sewer work only.”

When using Standard Drawings from other agencies, enlarge drawings so when reduced to 279 mm x 432 mm (11"x17") size they will be readable.

Return to Section 2 Table of Contents

DIST	COUNTY	ROUTE	KILOMETER POST TOTAL PROJECT	SHEET No	TOTAL SHEETS

REGISTERED CIVIL ENGINEER

PLANS APPROVAL DATE

REGISTERED PROFESSIONAL ENGINEER No. Exp. CIVIL STATE OF CALIFORNIA

The State of California or its officers or agents shall not be responsible for the accuracy or completeness of electronic copies of this plan sheet.

Caltrans now has a web site! To get to the web site, go to: http://www.dot.ca.gov

Caltrans Metric

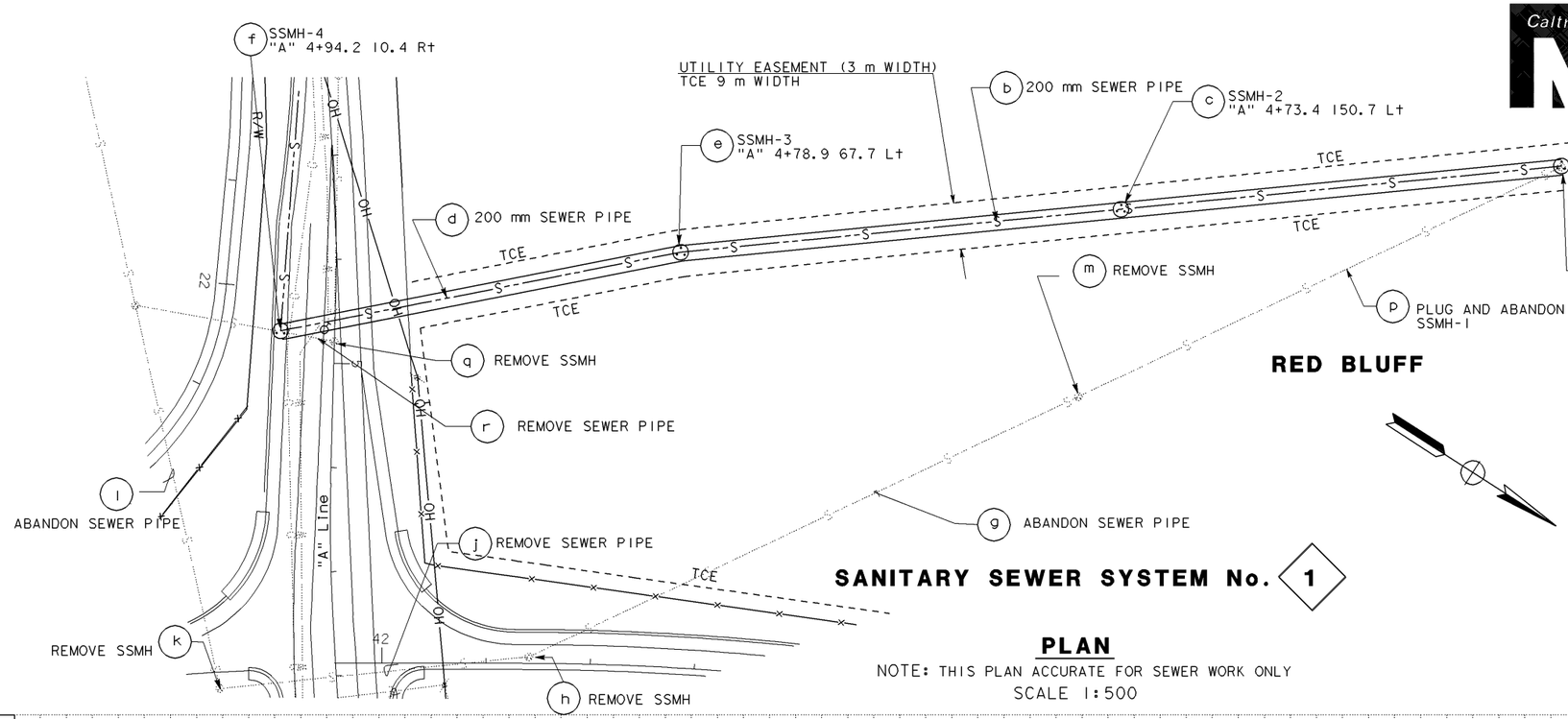

RED BLUFF

LEGEND

SSMH - SANITARY SEWER MANHOLE
TCE - TEMPORARY CONSTRUCTION EASEMENT

SANITARY SEWER SYSTEM No. 1

PLAN

NOTE: THIS PLAN ACCURATE FOR SEWER WORK ONLY
SCALE 1:500

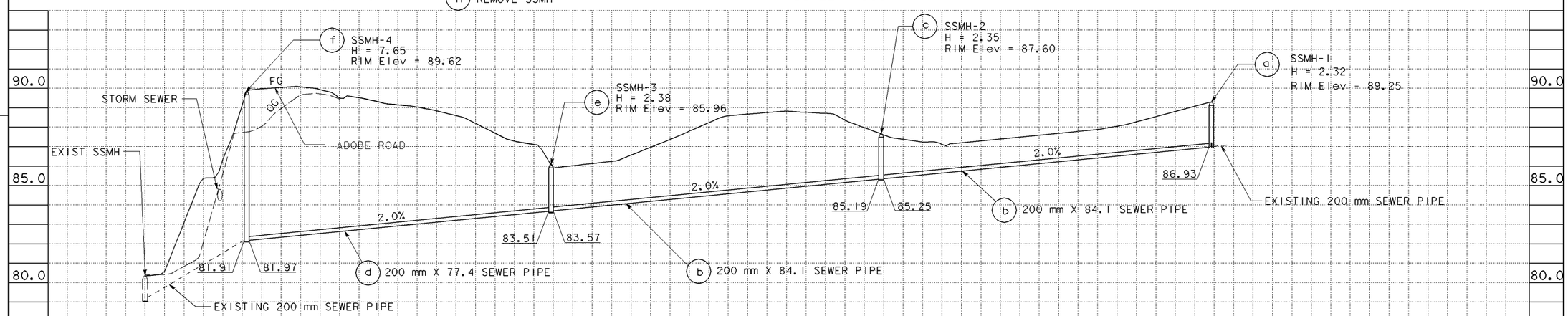

SANITARY SEWER SYSTEM No. 1

PROFILE

SCALE 1:500 Horiz
1:100 Vert

ALL DIMENSIONS ARE IN METERS UNLESS OTHERWISE SHOWN

SANITARY SEWER PLAN AND PROFILE

SCALE AS SHOWN

SS-1

DATE	REVISED BY	DATE REVISED

CALCULATED/DESIGNED BY
CHECKED BY
PROJECT ENGINEER

STATE OF CALIFORNIA - DEPARTMENT OF TRANSPORTATION
Caltrans DESIGN

LAST REVISION 04-02-01
DATE PLOTTED => 10-APR-2001
TIME PLOTTED => 09:03

FOR REDUCED PLANS ORIGINAL SCALE IS IN MILLIMETERS 0 20 40 60 80

USERNAME => trmlkesl
DGN FILE => dpm2_121.dgn

CU 00000 EA 000000

Return to Section 2 Table of Contents

DIST	COUNTY	ROUTE	KILOMETER POST TOTAL PROJECT	SHEET No	TOTAL SHEETS

REGISTERED CIVIL ENGINEER

PLANS APPROVAL DATE

REGISTERED PROFESSIONAL ENGINEER No. Exp. CIVIL STATE OF CALIFORNIA

The State of California or its officers or agents shall not be responsible for the accuracy or completeness of electronic copies of this plan sheet.

Caltrans now has a web site! To get to the web site, go to: http://www.dot.ca.gov

Caltrans Metric

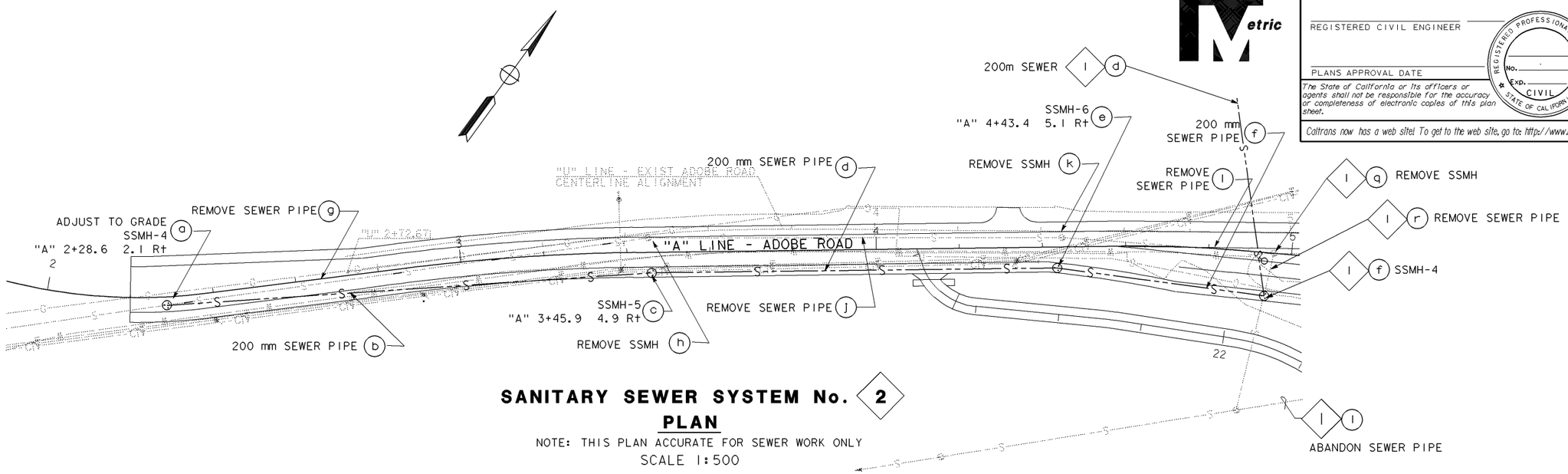

SANITARY SEWER SYSTEM No. 2

PLAN

NOTE: THIS PLAN ACCURATE FOR SEWER WORK ONLY

SCALE 1:500

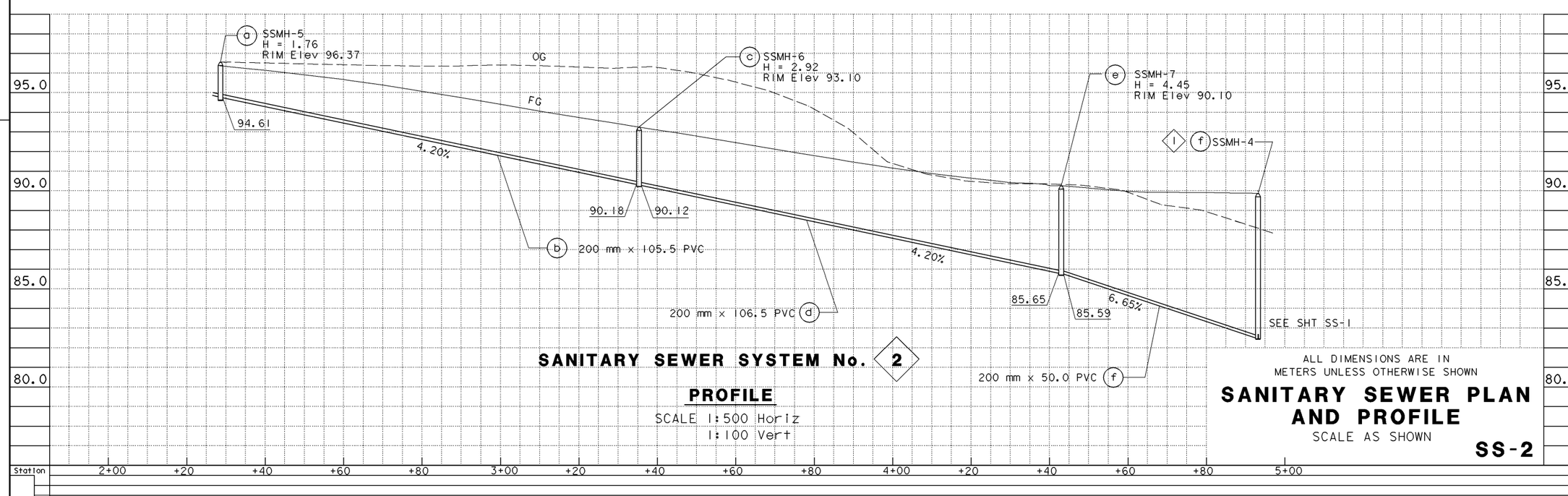

SANITARY SEWER SYSTEM No. 2

PROFILE

SCALE 1:500 Horiz
1:100 Vert

ALL DIMENSIONS ARE IN METERS UNLESS OTHERWISE SHOWN

SANITARY SEWER PLAN AND PROFILE

SCALE AS SHOWN

SS-2

DATE	REVISED BY	DATE REVISED

CALCULATED/DESIGNED BY

CHECKED BY

PROJECT ENGINEER

STATE OF CALIFORNIA - DEPARTMENT OF TRANSPORTATION

Caltrans DESIGN

LAST REVISION 04-02-01

DATE PLOTTED => 10-APR-2001
TIME PLOTTED => 09:03

FOR REDUCED PLANS ORIGINAL SCALE IS IN MILLIMETERS 0 20 40 60 80

USERNAME => trmikesl
DGN FILE => dpm2_122.dgn

CU 00000

EA 000000

Return to Section 2 Table of Contents

NOTES:

1. CONSTRUCT CONCRETE COLLAR SQUARE OR CIRCULAR.
2. SET TO STREET GRADE AFTER FINAL AC LIFT HAS BEEN PLACED.

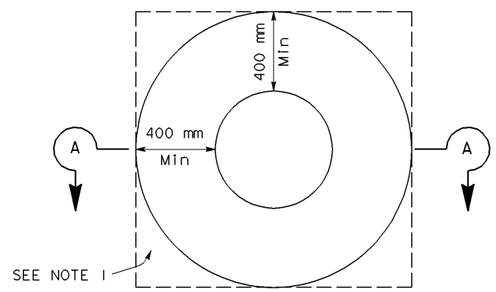

PLAN

MANHOLE PCC COLLAR

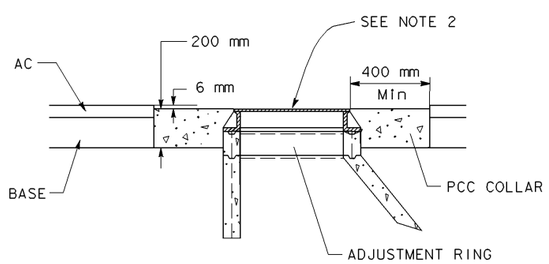

SECTION A-A

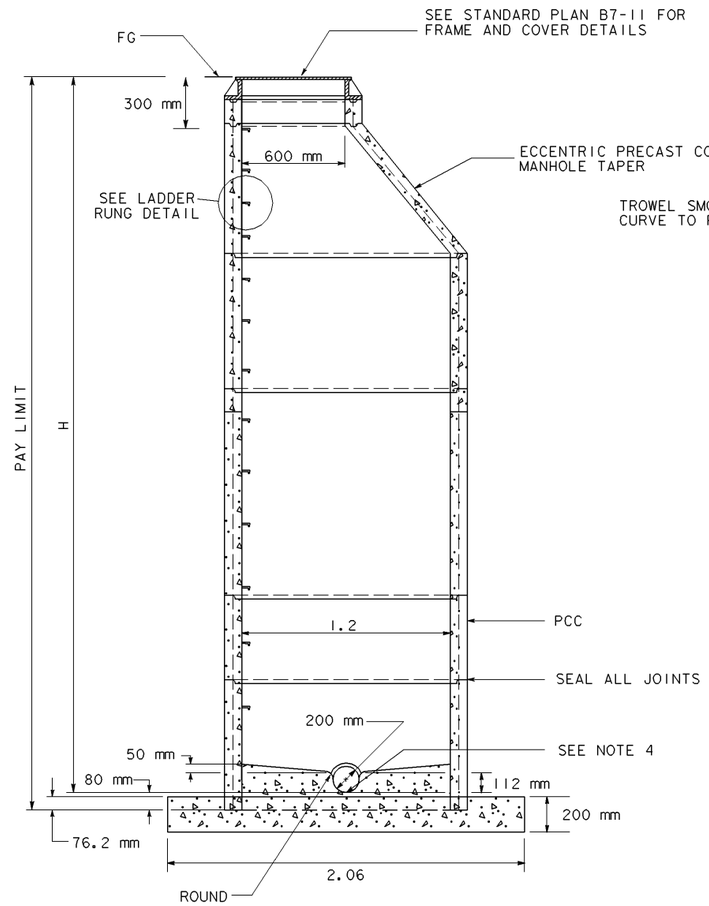

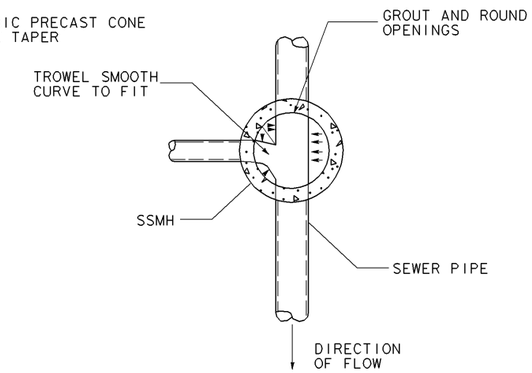

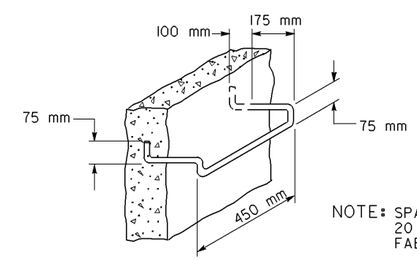

NOTE: SPACE LADDER RUNG @ 300 mm
20 mm Ø GALVZNIZE AFTER
FABRICATION

LADDER RUNG DETAIL

SANITARY SEWER MANHOLE

ALL DIMENSIONS ARE IN
METERS UNLESS OTHERWISE SHOWN

SANITARY SEWER DETAIL

NO SCALE

SS-3

DIST	COUNTY	ROUTE	KILOMETER POST TOTAL PROJECT	SHEET No	TOTAL SHEETS

REGISTERED CIVIL ENGINEER

PLANS APPROVAL DATE

REGISTERED PROFESSIONAL ENGINEER No. Exp. CIVIL STATE OF CALIFORNIA

The State of California or its officers or agents shall not be responsible for the accuracy or completeness of electronic copies of this plan sheet.

Caltrans now has a web site! To get to the web site, go to: http://www.dot.ca.gov

DATE	REVISED BY	DATE REVISED

CALCULATED/DESIGNED BY

CHECKED BY

PROJECT ENGINEER

STATE OF CALIFORNIA - DEPARTMENT OF TRANSPORTATION

DESIGN

LAST REVISION 04-02-01

DATE PLOTTED => 10-APR-2001
TIME PLOTTED => 09:04

FOR REDUCED PLANS ORIGINAL SCALE IS IN MILLIMETERS 0 20 40 60 80

USERNAME => trmikesl
DGN FILE => dpm2_123.dgn

CU 00000 EA 000000

Return to Section 2 Table of Contents

DIST	COUNTY	ROUTE	KILOMETER POST TOTAL PROJECT	SHEET No.	TOTAL SHEETS

Caltrans Metric

REGISTERED CIVIL ENGINEER

PLANS APPROVAL DATE

REGISTERED PROFESSIONAL ENGINEER No. Exp. CIVIL STATE OF CALIFORNIA

The State of California or its officers or agents shall Not be responsible for the accuracy or completeness of electronic copies of this plan sheet.

CaLtrans Now has a web site! To get to the web site, go to: http://www.dot.ca.gov

SANITARY SEWER QUANTITIES

SEWER PLAN SHEET No.	SYSTEM No. ◇	UNIT No. ○	200 mm SANITARY SEWER PIPE (m)	REMOVE SANITARY SEWER MANHOLE (EA)	REMOVE SANITARY SEWER PIPE (M)	ABANDON SANITARY SEWER PIPE (EA)	ADUST SANITARY SEWER MANHOLE TO GRADE (EA)	MODIFY SANITARY SEWER MANHOLE (EA)	SANITARY SEWER MANHOLE (m)	FRAME AND COVER (EA)	HEIGHT OF MANHOLE (m)	DESCRIPTION	STATION/OFFSET (FOR MANHOLES ONLY)	SYSTEM No. ◇	UNIT No. ○
SS-1	1	a						1			2.32	MODIFY SSMH-1	"A"4+70 234.6 Lt	1	a
		b	84.1												b
		c							2.5	1	2.35	CONSTRUCT SSMH-2	"A"4+73 150.7 Lt		c
		d	77.4												d
		e							2.5	1	2.38	CONSTRUCT SSMH-3	"A"4+79 67.7 Lt		e
		f							7.8	1	7.65	CONSTRUCT SSMH-4			f
		g				1						PLUG AND ABANDON EXISTING PIPE AT SSMH-3			g
		h		1								REMOVE EXISTING MANHOLE	"R3"42+28 1.2 Lt		h
		j			59.8							REMOVE EXISTING SEWER LINE			j
		k		1								REMOVE EXISTING MANHOLE	"R3"41+69 4.9 Rt		k
		l				1						PLUG AND ABANDON EXISTING SEWER LINE			l
		m		1								REMOVE EXISTING MANHOLE	"R3"43+25 60.8 Rt		m
		n	84.1												n
		p				1						PLUG AND ABANDON EXISTING SEWER LINE			p
		q		1								REMOVE EXISTING MANHOLE	"R3"41+90 62.4 Rt		q
		r			10.6							REMOVE EXISTING SEWER LINE			r
SS-2	2	a					1	1				ADJUST GRADE OF SSMH-5 RIM	"A"2+28 0.6 Rt	2	a
		b	105.5												b
		c							3.0	1	2.92	CONSTRUCT SSMH-6	"A"3+46 4.9 Lt		c
		d	106.5												d
		e							4.6	1	4.45	CONSTRUCT SSMH-7	"A"4+43 5.1 Lt		e
		f	50.0												f
		g			116.0							REMOVE EXISTING SEWER PIPE			g
		h		1								REMOVE EXISTING MANHOLE	"A"3+44 2.0 Lt		h
		j			100.0							REMOVE EXISTING SEWER PIPE			j
		k		1								REMOVE EXISTING MANHOLE	"A"4+43 0.8 Lt		k
		l			51.0							REMOVE EXISTING SEWER PIPE			l
TOTAL			507.6	6	337.4	3	1	2	20.4	5					

SANITARY SEWER QUANTITIES

SS-4

DATE	REVISED BY	DATE REVISED

CALCULATED/DESIGNED BY

CHECKED BY

PROJECT ENGINEER

STATE OF CALIFORNIA - DEPARTMENT OF TRANSPORTATION

Caltrans

DESIGN

LAST REVISION 04-02-01

DATE PLOTTED => 10-APR-2001
TIME PLOTTED => 09:04

FOR REDUCED PLANS ORIGINAL SCALE IS IN MILLIMETERS 0 20 40 60 80

USERNAME => trmikesl
DGN FILE => dpm2_124.dgn

CU 00000

EA 000000

Return to Section 2 Table of Contents

2-2.13 Utility Plans and Details

Existing utilities are to be clearly and accurately depicted on the project plans. Where utilities are to be relocated, existing and final location of the utilities are to be shown on the project plans. Where extensive or complex utility systems are to be shown, separate sheets of utility plans and details shall be included in the project plans.

It is responsibility of the project engineer to provide Right of Way Utility section with appropriate prints of geometric plans, profiles, and cross sections as required for the purposes of determining the location, possible utility conflicts, and negotiating utility agreements. This information should be provided to the utility section when geometric approval is obtained. The utility section will provide the project engineer with any corrections and additions to the preliminary utility plan after review by the utility companies. This information shall be included in the final utility plans.

Exceptions to including utility facilities as part of the project plans may be made where the nature of the work to be done is such that there is little likelihood of damage to existing facilities. Examples of such projects are grooving, asphalt concrete overlays, or landscaping.

High risk utilities must be shown in accordance with departmental policy on high and low risk underground facilities within the right of way. High risk facilities are identified in the "Policy on High and Low Risk Underground Facilities within Highway Rights of Way" and in Standard Special Provision 8.02. If high risk utilities are involved on the project, both elevation and horizontal alignment of the facilities or only horizontal alignment need be shown on the plans. Refer to the "Policy on High and Low Risk Underground Facilities within Highway Rights of Way".

Generally, alignment and elevation for high risk facilities need not be shown for:

- resurfacing, pavement markers, grinding, grooving, and curb ramp projects where planned excavation is 150 millimeters or less below the existing ground level and
- pavement removal or trenching beneath existing pavement where planned excavation is 300 millimeters or less below the existing road surface.

Only horizontal alignment is necessary if the high risk facility is more than 1.1 m below the lowest planned work or when the facility is 1.2 m or more horizontally from the side of the excavation. If the high risk facility is more than 1.1 m below the lowest planned work, it should be noted on the plan as "Depth exceeds 1.1 m below planned work".

All projects must conform to the "Policy on High and Low Risk Underground Facilities within Highway Rights of Way". Submit any deviation from the policy to Chief, Office of Resolutions of Necessity, Encroachments and Resource Conservation in the Design Program for approval. Include a copy of the approval with the PS&E submittal

Existing utilities should be shown dropped out unless they would not be readable on prints or reductions. If they will not be readable, they should be darkened sufficiently to become readable as well as distinguishable from the new or relocated facilities. The utility plans shall show what work is to be performed, such as remove, relocate, abandoned or new installations. Clearly define utility work as to which is to be done by our contractor and which to be done by others. State-owned facilities shall be shown where they may affect the work. Utilities to be relocated (or removed or installed) prior to construction should be labeled on the plans as "To be relocated (or removed or installed) by others."

Partial cross sections showing the relation of an existing utility to a proposed drainage pipe or bridge footing should be shown on the plans to avoid conflicts. This is critical if hazardous pipe lines are involved.

Pot holing generally is required prior to advertising where high risk underground facilities may be affected.

Each sheet of the Utility Plans shall have the following note included on them: "This plan accurate for Utility work only."

Return to Section 2 Table of Contents, page 2-72

NOTES:

1. LOCATIONS OF UTILITY FACILITIES SHOWN ON THESE PLANS ARE APPROXIMATE AND SHALL BE VERIFIED BY THE CONTRACTOR PRIOR TO CONSTRUCTION.

2. UTILITY OWNERSHIP ON THIS PROJECT:

   GAS-SOUTHWEST GAS (SWG)
   WATER-TRUCKEE-DONNER PUBLIC UTILITY DISTRICT (TDPUD)
   -TRUCKEE SANITARY DISTRICT (TSD)
   ELECTRIC-SIERRA PACIFIC POWER (SPP)
   -TRUCKEE-DONNER PUBLIC UTILITY DISTRICT (TDPUD)
   TELEPHONE-PACBELL
   -UNION PACIFIC RAILROAD (UPRR)
   PETROLEUM-SANTA FE PACIFIC PETROLEUM (SFPP)
   FIBER OPTICS-UP FIBER OPTICS
   -MCI FIBER OPTICS
   SEWER-TAHOE-TRUCKEE SANITATION AGENCY (TTSA)
   -TRUCKEE SANITARY DISTRICT (TSD)
   CABLE-WESTSTAR CABLE TV

3. ALL ELEVATIONS SHOWN REFER TO THE TOP OF PIPE ELEVATION UNLESS OTHERWISE INDICATED.

4. THIS PLAN ACCURATE FOR UTILITIES ONLY.

ABBREVIATIONS

TCE=TEMPORARY CONSTRUCTION EASEMENT
HP=HIGH PRESSURE GAS/HIGH RISK
LP=LOW PRESSURE GAS/LOW RISK
TV=CABLE TELEVISION

LEGEND

NO WORK IS TO BE PERFORMED IN THIS AREA UNTIL WRITTEN APPROVAL IS OBTAINED FROM THE ENGINEER.

DIST	COUNTY	ROUTE	KILOMETER POST TOTAL PROJECT	SHEET No	TOTAL SHEETS

REGISTERED CIVIL ENGINEER

PLANS APPROVAL DATE

REGISTERED PROFESSIONAL ENGINEER No. Exp. CIVIL STATE OF CALIFORNIA

The State of California or its officers or agents shall not be responsible for the accuracy or completeness of electronic copies of this plan sheet.

Caltrans now has a web site! To get to the web site, go to: http://www.dot.ca.gov

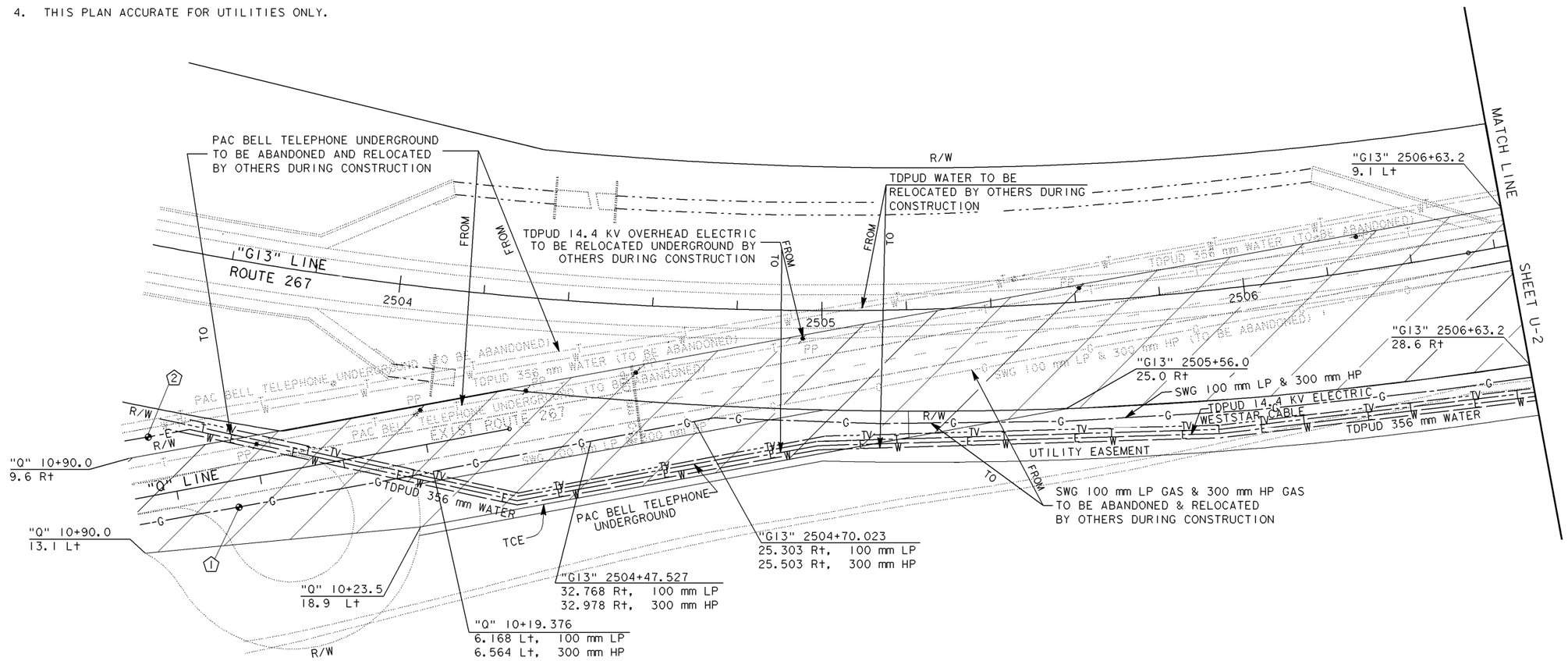

POTHOLE LOCATION TABLE

X	UTILITY	NORTHING	EASTING	UTILITY ELEV	DEPTH
1	GAS-SWG	695478.316	18441399.666	66.147	1.45
2	ELE-SPP	695466.587	18419165.215	70.884	0.74

ALL DIMENSIONS ARE IN METERS UNLESS OTHERWISE SHOWN

UTILITY PLAN

SCALE 1:500

U-1

STATE OF CALIFORNIA - DEPARTMENT OF TRANSPORTATION
Caltrans
DESIGN

PROJECT ENGINEER | CALCULATED/DESIGNED BY | CHECKED BY | DATE | REVISED BY | DATE REVISED

LAST REVISION 04-02-01 | DATE PLOTTED => 10-APR-2001 | TIME PLOTTED => 09:04

FOR REDUCED PLANS ORIGINAL SCALE IS IN MILLIMETERS 0 20 40 60 80

USERNAME => trmikesl
DGN FILE => dpm2_127.dgn

CU 00000 | EA 000000

Return to Section 2 Table of Contents

Return to Section 2 Table of Contents

(Blank)

2-2.14 Transportation Management Plans

Plans for project transportation management are to be included in the set of project plans as part of the project's overall Transportation Management Plan to minimize activity-related traffic delays and accidents. The plans should include, but not be limited to, advance closure signs, closure alerts using portable changeable message signs, and detour signing. The project's overall Transportation Management Plan has the goal of congestion relief during project construction activities by managing traffic flow through and around the project area.

Criteria for developing the overall Transportation Management Plan for the project is included in the publication, " Transportation Management Plan Guidelines", prepared by Traffic Operations Program - Office of Systems Management Operations.

DIST	COUNTY	ROUTE	KILOMETER POST TOTAL PROJECT	SHEET No	TOTAL SHEETS

REGISTERED CIVIL ENGINEER

PLANS APPROVAL DATE

REGISTERED PROFESSIONAL ENGINEER No. Exp. CIVIL STATE OF CALIFORNIA

The State of California or its officers or agents shall not be responsible for the accuracy or completeness of electronic copies of this plan sheet.

Caltrans now has a web site! To get to the web site, go to: http://www.dot.ca.gov

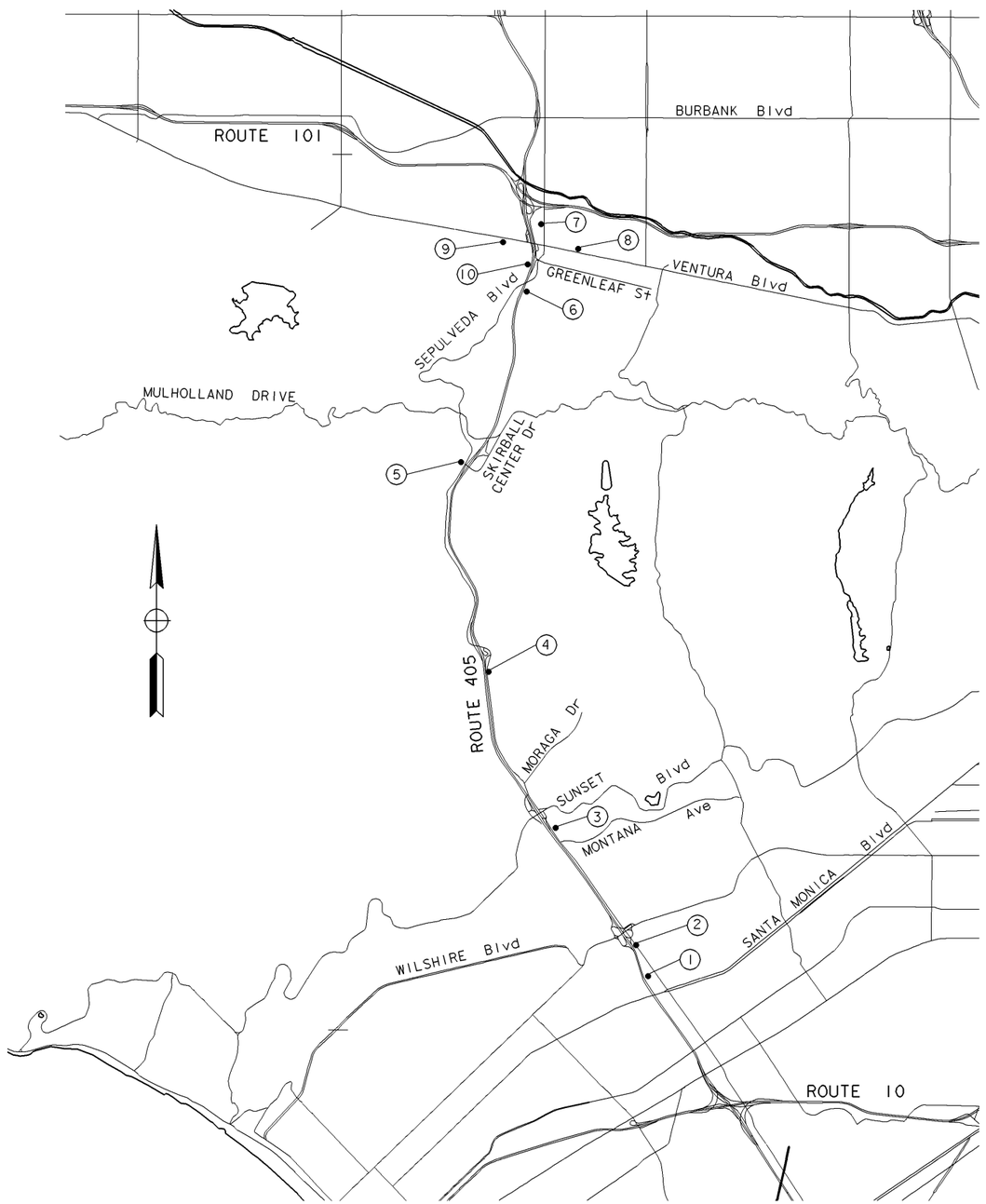

PCMS	LOCATIONS*	MESSAGE FIRST FLASH	MESSAGE SECOND FLASH	REMARKS
1	NB ROUTE 405 GORE OF SANTA MONICA Blvd ON-RAMP	Rt LANE CLOSED @ MULHOLND	EXPECT DELAY	34-HR EXTENDED WEEKEND CLOSURE OPERATING HOURS: 9:00 am Sunday to Midnight Sunday
2	NB ROUTE 405 MAINLINE RIGHT SHOULDER BETWEEN WILSHIRE Blvd ON AND OFF-RAMPS	Rt LANE CLOSED @ MULHOLND	EXPECT DELAY	34-HR EXTENDED WEEKEND CLOSURE OPERATING HOURS: 9:00 am Sunday to Midnight Sunday
3	NB ROUTE 405 SHOULDER AREA 1000 METERS UPSTREAM OF SUNSET Blvd OFF-RAMP	Rt LANE CLOSED @ MULHOLND	EXPECT DELAY	34-HR EXTENDED WEEKEND CLOSURE OPERATING HOURS: 9:00 am Sunday to Midnight Sunday
4	NB ROUTE 405 SHOULDER AREA 500 METERS UPSTREAM OF GETTY CENTER DRIVE OFF-RAMP NEAR CALL BOX #342	Rt LANE CLOSED @ MULHOLND	EXPECT DELAY	34-HR EXTENDED WEEKEND CLOSURE OPERATING HOURS: 9:00 am Sunday to Midnight Sunday
5	NB SEPULVEDA Blvd RIGHT SHOULDER AREA SOUTH OF SKIRBALL CENTER DRIVE	SEPULVDA Blvd CLOSED	AT VALLEY VISTA	NB SEPULVEDA Blvd CLOSURE
6	NB ROUTE 405 SHOULDER AREA 500 METERS SOUTH OF VENTURA Blvd OFF-RAMP	SEPULVDA Blvd DETOUR	USE BURBANK Blvd	NB SEPULVEDA Blvd CLOSURE
7	SB SEPULVEDA Blvd 400 METERS NORTH OF VENTURA Blvd	SEPULVDA Blvd CLOSED	AT VALLEY VISTA	SB SEPULVEDA Blvd CLOSURE
8	WB VENTURA Blvd 400 METERS EAST OF SEPULVEDA Blvd	SEPULVDA Blvd CLOSED	AT VALLEY VISTA	SB SEPULVEDA Blvd CLOSURE
9	EB VENTURA Blvd 400 METERS WEST OF NORTHBOUND 405 ON-RAMP	SEPULVDA Blvd CLOSED	AT VALLEY VISTA	SB SEPULVEDA Blvd CLOSURE
10	SB ROUTE 405 SHOULDER AREA 100 METERS UPSTREAM OF VALLEY VISTA OFF-RAMP	SEPULVDA Blvd DETOUR	USE VALLEY VISTA	SB SEPULVEDA Blvd CLOSURE

NOTE: * PCMS LOCATIONS TO BE CONFIRMED BY THE ENGINEER BEFORE THE ACTUAL CLOSURE.

LEGEND

PCMS = PORTABLE CHANGEABLE MESSAGE SIGN

TRANSPORTATION MANAGEMENT PLAN (PORTABLE CHANGEABLE MESSAGE SIGN LOCATIONS)

NO SCALE

THIS PLAN ACCURATE FOR TRANSPORTATION MANAGEMENT WORK ONLY.

TM-1

STATE OF CALIFORNIA - DEPARTMENT OF TRANSPORTATION

Caltrans DESIGN

PROJECT ENGINEER

CHECKED BY

CALCULATED/DESIGNED BY

DATE REVISED BY

DATE REVISED

LAST REVISION 04-02-01

DATE PLOTTED => 10-APR-2001
TIME PLOTTED => 09:04

FOR REDUCED PLANS ORIGINAL SCALE IS IN MILLIMETERS 0 20 40 60 80

USERNAME => trmikesl
DGN FILE => dpm2_131.dgn

CU 00000

EA 000000

Return to Section 2 Table of Contents

DIST	COUNTY	ROUTE	KILOMETER POST TOTAL PROJECT	SHEET No	TOTAL SHEETS

REGISTERED CIVIL ENGINEER

PLANS APPROVAL DATE

REGISTERED PROFESSIONAL ENGINEER No. Exp. CIVIL STATE OF CALIFORNIA

The State of California or its officers or agents shall not be responsible for the accuracy or completeness of electronic copies of this plan sheet.

Caltrans now has a web site! To get to the web site, go to: http://www.dot.ca.gov

Caltrans Metric

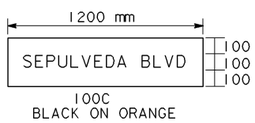

SPECIAL "A"

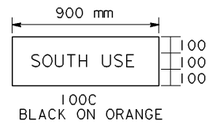

SPECIAL "B"

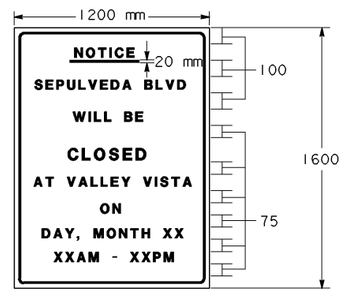

SPECIAL "C"

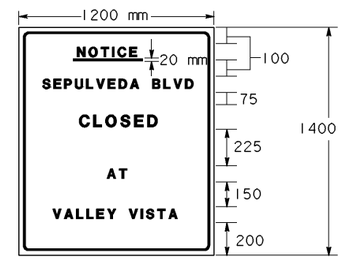

SPECIAL "D"

SIGN	SIZE	BORDER WIDTH	MARGIN WIDTH	LETTER SIZE						CORNER RADIUS
				LINE 1	LINE 2	LINE 3	LINE 4	LINE 5	LINE 6,7 & 8*	
SPECIAL "A"	1200 x 300			100C						
SPECIAL "B"	900 x 300			100C						
SPECIAL "C"	1200 x 1600	30	20	100E	100D*	100D	150E	100D*	75D	75
SPECIAL "D"	1200 x 1400	30	20	100E	100D*	150E	100E	100D*		75
* CONDENSED SPACING IF NECESSARY										

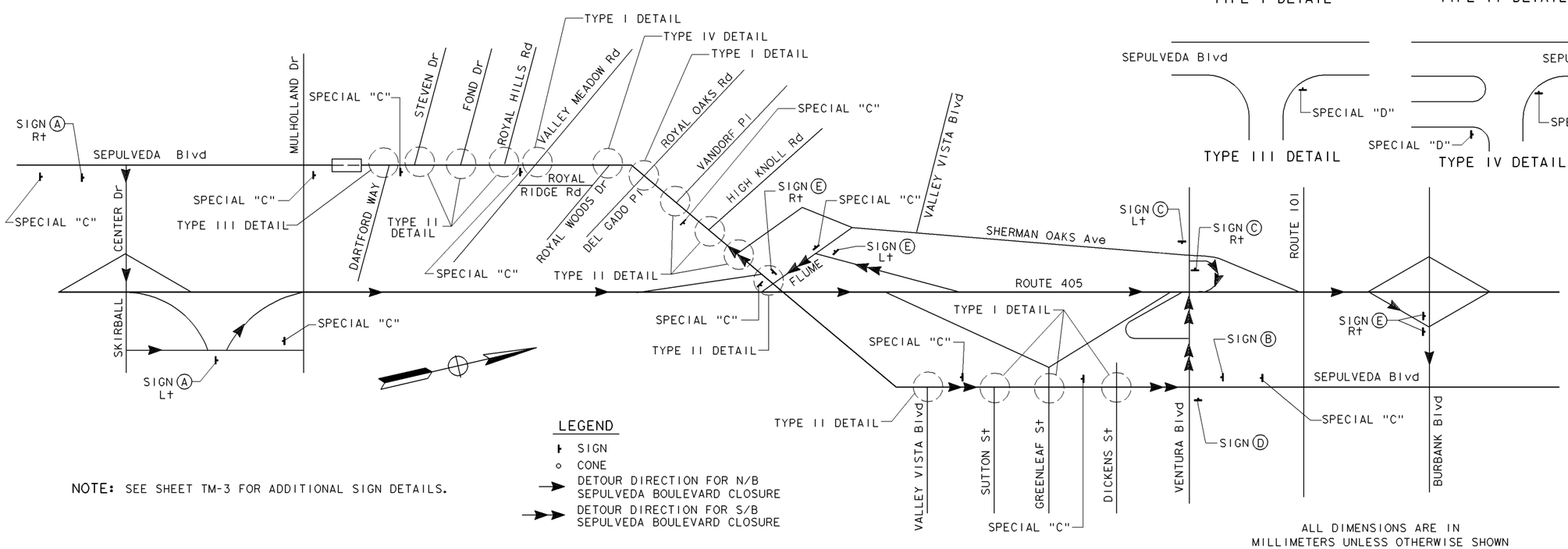

NOTE: SEE SHEET TM-3 FOR ADDITIONAL SIGN DETAILS.

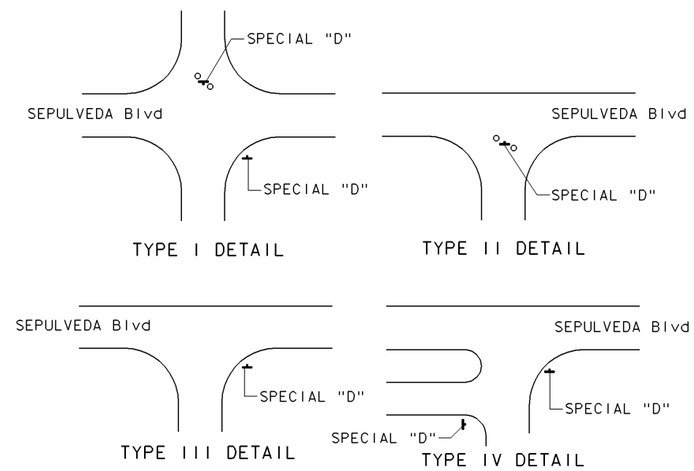

ALL DIMENSIONS ARE IN MILLIMETERS UNLESS OTHERWISE SHOWN

TRANSPORTATION MANAGEMENT PLAN AND SIGN DETAILS

NO SCALE

THIS PLAN ACCURATE FOR TRANSPORTATION MANAGEMENT WORK ONLY.

TM-2

STATE OF CALIFORNIA - DEPARTMENT OF TRANSPORTATION

Caltrans

DESIGN

PROJECT ENGINEER

CALCULATED/DESIGNED BY

CHECKED BY

REVISED BY

DATE REVISED

DATE

LAST REVISION 04-02-01

DATE PLOTTED => 10-APR-2001
TIME PLOTTED => 09:04

FOR REDUCED PLANS ORIGINAL SCALE IS IN MILLIMETERS 0 20 40 60 80

USERNAME => trmikesi
DGN FILE => dpm2_132.dgn

CU 00000

EA 000000

Return to Section 2 Table of Contents

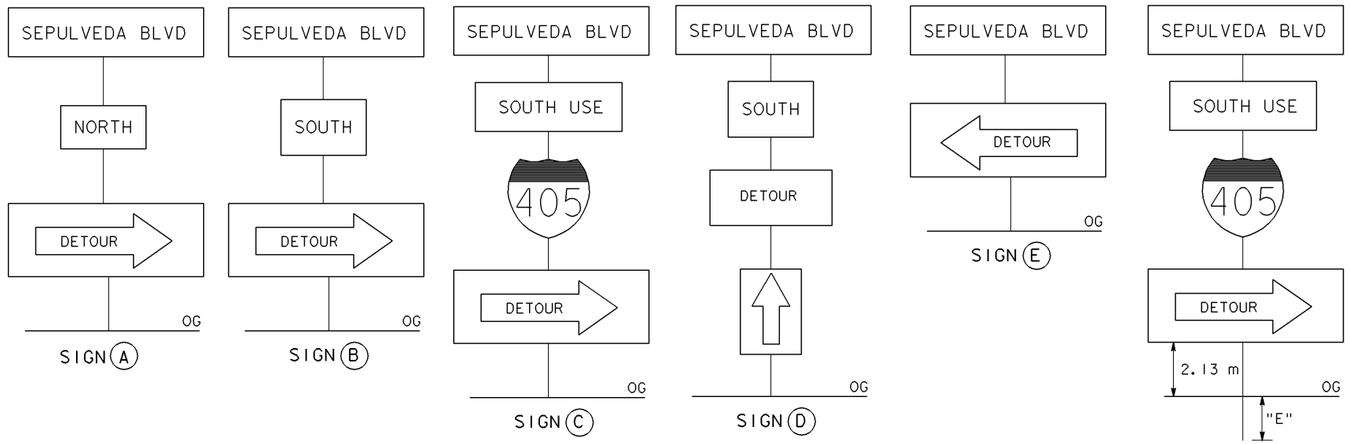

TYPICAL SIGN INSTALLATION

TRANSPORTATION MANAGEMENT SIGN QUANTITIES

SIGN No.	PANEL SIZE (mm x mm)	POST SIZE (mm)	No OF POST (EA)	"E" DIMENSION (m)	SIGN QUANTITY (EA)	REMARKS
SIGN A						
SPECIAL "A"	1200 x 300	89 x 140	1	1.4	2	BLACK ON ORANGE
G47	525 x 375					BLACK ON ORANGE
C5 (Rt/Lt)	1219 x 457					
SIGN B						
SPECIAL "A"	1200 x 300	89 x 140	1	1.4	1	BLACK ON ORANGE
G48	525 x 375					BLACK ON ORANGE
C5 (Rt/Lt)	1219 x 457					
SIGN C						
SPECIAL "A"	1200 x 300	89 x 140	1	1.4	2	BLACK ON ORANGE
SPECIAL "B"	900 x 300					BLACK ON ORANGE
G-27-2	450 x 525					
C5 (Rt/Lt)	1219 x 457					
SIGN D						
SPECIAL "A"	1200 x 300	89 x 140	1	1.4	1	BLACK ON ORANGE
G48	525 x 375					BLACK ON ORANGE
C5A	750 x 375					
G36	525 x 375					BLACK ON ORANGE
SIGN E						
SPECIAL "A"	1200 x 300	89 x 140	1	1.4	4	BLACK ON ORANGE
C5 (Rt/Lt)	1219 x 457					
SPECIAL "C"	1200 x 1600	SEE NOTE #1	1		11	BLACK ON ORANGE
SPECIAL "D"	1200 x 1400	SEE NOTE #1	1		21	BLACK ON ORANGE
TOTAL					42	

NOTE:
1. SPECIAL "C" AND "D" SIGNS TO BE PLACED ON BARRICADE WITH TWO RED FLAGS ON EACH SIGN.
2. SIGN LOCATIONS ARE APPROXIMATE ONLY. EXACT LOCATIONS ARE TO BE DETERMINED BY THE ENGINEER TO PROVIDE ADEQUATE VISIBILITY.
3. IN LIEU OF WOOD POSTS, SIGNS MAY BE ATTACHED TO THE EXISTING UTILITY POSTS BY STRAP AND SADDLE METHOD.
4. SEE SHEET TM-2 FOR ADDITIONAL SIGN DETAILS.

DIST	COUNTY	ROUTE	KILOMETER POST TOTAL PROJECT	SHEET No	TOTAL SHEETS

REGISTERED CIVIL ENGINEER

PLANS APPROVAL DATE

REGISTERED PROFESSIONAL ENGINEER No. Exp. CIVIL STATE OF CALIFORNIA

The State of California or its officers or agents shall not be responsible for the accuracy or completeness of electronic copies of this plan sheet.

Caltrans now has a web site! To get to the web site, go to: http://www.dot.ca.gov

Caltrans Metric

TRANSPORTATION MANAGEMENT PLAN, SIGN DETAILS AND QUANTITIES

NO SCALE

TM-3

STATE OF CALIFORNIA - DEPARTMENT OF TRANSPORTATION
Caltrans DESIGN

PROJECT ENGINEER | CHECKED BY | CALCULATED/DESIGNED BY | DATE | REVISED BY | DATE REVISED

LAST REVISION 04-02-01 | DATE PLOTTED => 10-APR-2001 | TIME PLOTTED => 09:04

FOR REDUCED PLANS ORIGINAL SCALE IS IN MILLIMETERS 0 20 40 60 80

USERNAME => trmikesl
DGN FILE => dpm2_133.dgn

CU 00000 | EA 000000

Return to Section 2 Table of Contents

Return to Section 2 Table of Contents

(Blank)

2-2.15 Stage Construction, Traffic Handling Plans, and Detours

These plans show the sequence of operation, work to be performed, materials to be used, and the traveled way to be used for all movements of traffic during each construction sequence.

Stage Construction and Traffic Handling Plans and Detour Plans shall be included in the project plans when detours or staging of the work is needed. Where sufficient information to construct detours cannot be shown on the Stage Construction and Traffic Handling Plans, separate Detour Plans shall be prepared.

Each stage shown on the Stage Construction Plan shall show the sequence of construction by symbols and corresponding legend. The symbols used shall show the following:

(a) Existing roadbeds and those roadbeds completed on previous stage,

(b) Construction to be performed in the stage shown,

(c) Traffic direction and number of lanes available in the stage shown.

Existing roads or detours that have been replaced by permanent construction in previous stages shall not be shown on subsequent stages.

The Stage Construction Plans should contain sufficient alignment, profiles, and typical cross sections to construct temporary roadways in the stage sequence shown. It is not necessary to show profiles and typical cross sections on the Stage Construction Plan Sheets if they are clearly shown elsewhere in the project plans. However, if they are not shown on the Stage Construction Plans, reference should be made to the Project Plan Sheets that show same.

Traffic Handling Plans show how traffic is to be routed and maintained within the limits of the project. These plans are unique for each individual project. The plans show long-term closures of lanes and ramps, detours and the number of traffic lanes available for public traffic. Rerouting or detouring of traffic may require restriping of roadbeds.

Traffic Handling Plans should not be confused with Traffic Control System Standard Plans (“T” Series). Traffic Control System Plans show lane closures or ramp closures, which are for short periods of time. The traffic control systems shown on the Standard Plans are usually installed and removed on a daily basis.

The components of the Traffic Handling Plans consist of such items as channelizers, Class 1 delineators, portable delineators, barricades, construction area signs, flashing yellow beacons, temporary striping (edgelines, centerlines, lane lines, etc.), temporary pavement markings, temporary pavement markers, etc. The components of the Traffic Handling Plan are normally paid for as separate pay items.

Pay quantities may be summarized with the Traffic Handling Plans or on the summary of quantities sheet.

The Stage Construction and Traffic Handling Plans shall include temporary drainage, temporary signing, temporary striping, and temporary lighting requirements. Modification of existing traffic signals or installation of temporary signals may be required for stage construction and may be shown on the Electrical plan sheets provided a cross reference to the appropriate electrical plan sheet is included on the applicable stage construction plan sheet.

If utility installation or relocation work by others is to be coordinated with the Contractor’s operations, such work shall be shown on the Stage Construction and Traffic Handling Plans and designated as work to be done by others. Cross references should be made to the Utility Plan Sheet that applies.

Each sheet of the Stage Construction Plan, Traffic Handling Plan, and Detour Plan shall have a note included on them as applicable to the work shown: Example: “This plan accurate for Stage Construction work only.”

Return to Section 2 Table of Contents

DIST	COUNTY	ROUTE	KILOMETER POST TOTAL PROJECT	SHEET No	TOTAL SHEETS

REGISTERED CIVIL ENGINEER

PLANS APPROVAL DATE

REGISTERED PROFESSIONAL ENGINEER No. Exp. CIVIL STATE OF CALIFORNIA

The State of California or its officers or agents shall not be responsible for the accuracy or completeness of electronic copies of this plan sheet.

Caltrans now has a web site! To get to the web site, go to: http://www.dot.ca.gov

Caltrans Metric

LEGEND

- XX CONSTRUCTION AREA SIGN
- BT XX BEGIN TEMPORARY TRAFFIC STRIPE (TAPE)
- ET XX END TEMPORARY TRAFFIC STRIPE (TAPE)
- BR XX BEGIN REMOVAL PAVEMENT DELINEATION
- ER XX END REMOVAL PAVEMENT DELINEATION
- T XX TEMPORARY TRAFFIC STRIPE (TAPE)
- R XX REMOVE PAVEMENT DELINEATION
- TRAFFIC PLASTIC DRUM
- T 11/13 INDICATES COMBINATION STRIPE OF DETAIL 11 AND DETAIL 13
- TEMPORARY RAILING (TYPE K)

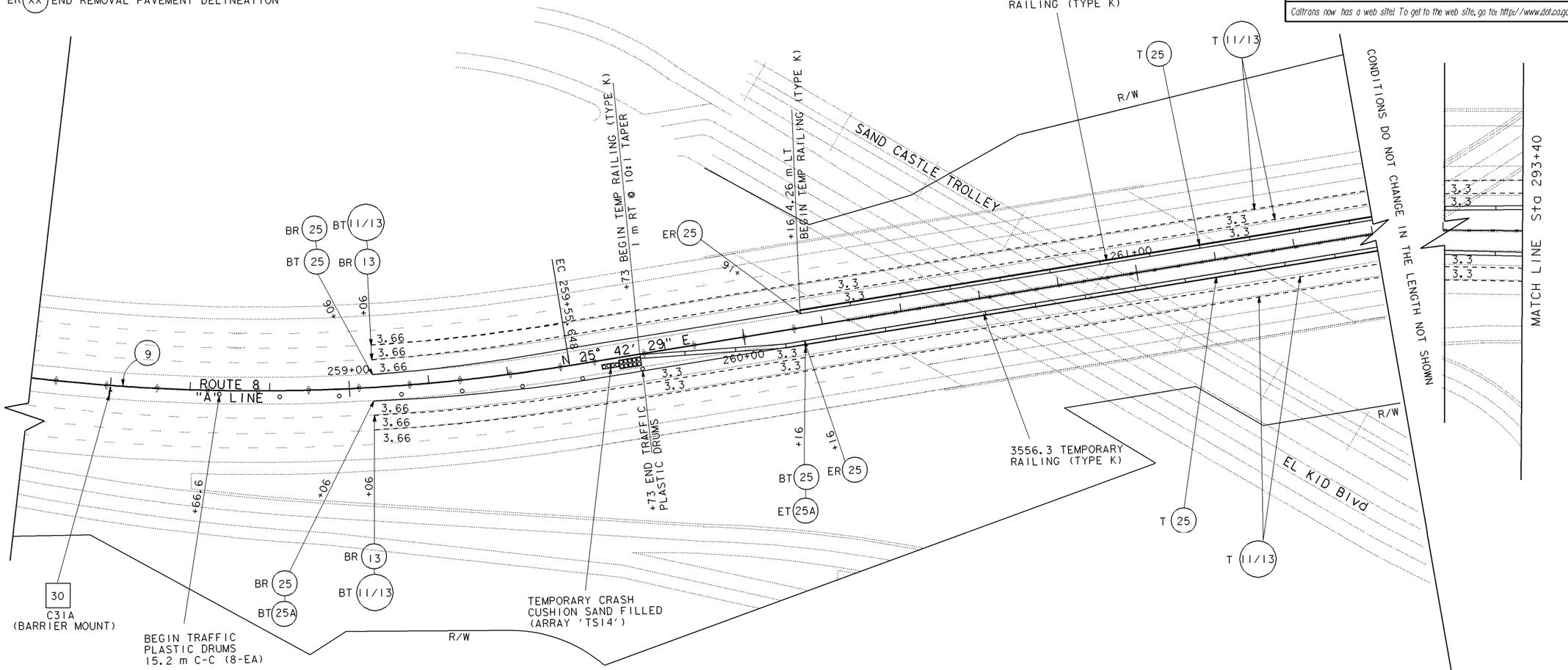

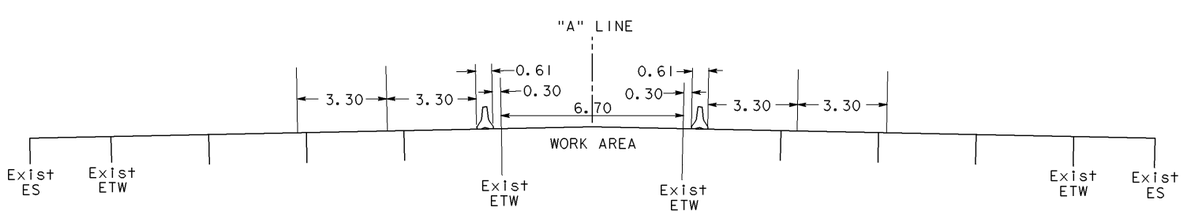

CURVE DATA

No.	R	Δ	T	L
9	487.685	66° 49' 18"	321.702	568.768

ALL DIMENSIONS ARE IN METERS UNLESS OTHERWISE SHOWN

STAGE CONSTRUCTION

SCALE 1:500

THIS PLAN ACCURATE FOR STAGE CONSTRUCTION WORK ONLY.

STAGE CONSTRUCTION SHEET, EXAMPLE "A"

SC-1

DATE	REVISED BY	DATE REVISED

CALCULATED/DESIGNED BY

CHECKED BY

PROJECT ENGINEER

STATE OF CALIFORNIA - DEPARTMENT OF TRANSPORTATION

Caltrans PROJECT DEVELOPMENT

LAST REVISION 04-04-01 | DATE PLOTTED => 10-APR-2001 | TIME PLOTTED => 09:04

FOR REDUCED PLANS ORIGINAL SCALE IS IN MILLIMETERS 0 20 40 60 80

USERNAME => trmikesl
DGN FILE => dpm2_137.dgn

CU 00000 EA 000000

Return to Section 2 Table of Contents

DIST	COUNTY	ROUTE	KILOMETER POST TOTAL PROJECT	SHEET No	TOTAL SHEETS

REGISTERED CIVIL ENGINEER

PLANS APPROVAL DATE

REGISTERED PROFESSIONAL ENGINEER No. Exp. CIVIL STATE OF CALIFORNIA

The State of California or its officers or agents shall not be responsible for the accuracy or completeness of electronic copies of this plan sheet.

Caltrans now has a web site! To get to the web site, go to: http://www.dot.ca.gov

Caltrans Metric

LEGEND

- CONSTRUCT THIS STAGE
- REMOVE AND CONSTRUCT THIS STAGE
- DIRECTION OF TRAFFIC
- TEMPORARY RAILING (TYPE K)
- EXISTING TEMPORARY RAILING (TYPE K)
- SIGN, ONE POST

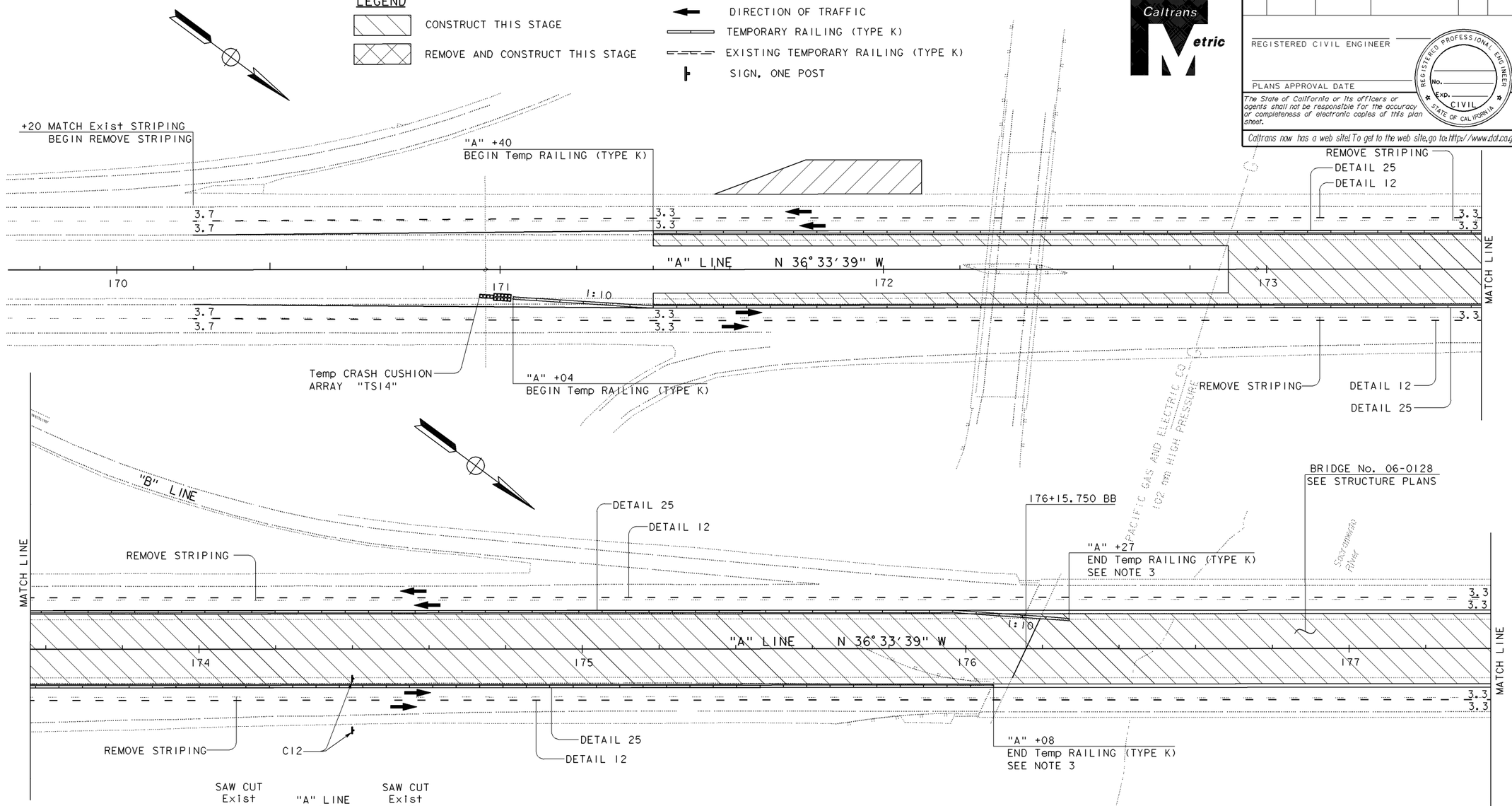

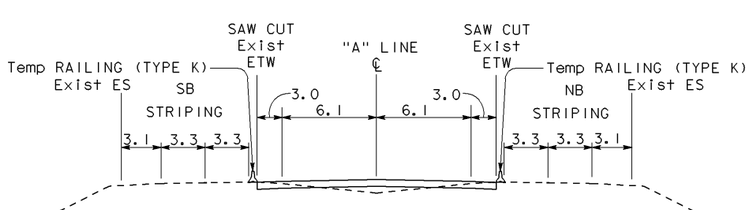

TEMPORARY RAILING (TYPE K) PLACEMENT
NO SCALE

THIS PLAN ACCURATE FOR STAGE CONSTRUCTION ONLY.

NOTES:

1. FOR SIGN DETAILS, REFER TO SC-15.
2. LOCATIONS FOR CONSTRUCTION AREA SIGNS ARE APPROXIMATE. EXACT LOCATIONS WILL BE DETERMINED BY THE ENGINEER.
3. LAST TEMPORARY RAILING (TYPE K) SECTION SHALL BE PINNED OR SECURED AS DETERMINED BY THE ENGINEER.
4. FOR TEMPORARY LIGHTING DETAILS IN STAGE 2 REFER TO E-12.
5. FOR TEMPORARY LIGHTING DETAILS IN STAGE 3A,B,C REFER TO E-13.

ALL DIMENSIONS ARE IN METERS
UNLESS OTHERWISE SHOWN

STAGE 1A

STAGE CONSTRUCTION AND TRAFFIC HANDLING PLAN

SCALE 1:500

SC-1

STAGE CONSTRUCTION SHEET, EXAMPLE "B-1"

DATE	REVISED BY	DATE REVISED

CALCULATED/DESIGNED BY

CHECKED BY

PROJECT ENGINEER

STATE OF CALIFORNIA - DEPARTMENT OF TRANSPORTATION

Caltrans

DESIGN

10-APR-2001 dpm2_138.dgn

09:04

LAST REVISION 04-04-01

DATE PLOTTED => 10-APR-2001
TIME PLOTTED => 09:04

FOR REDUCED PLANS ORIGINAL SCALE IS IN MILLIMETERS 0 20 40 60 80

USERNAME => trmikesl
DGN FILE => dpm2_138.dgn

CU 03261 EA 260121

Return to Section 2 Table of Contents

DIST	COUNTY	ROUTE	KILOMETER POST TOTAL PROJECT	SHEET No	TOTAL SHEETS

REGISTERED CIVIL ENGINEER

PLANS APPROVAL DATE

REGISTERED PROFESSIONAL ENGINEER No. Exp. CIVIL STATE OF CALIFORNIA

The State of California or its officers or agents shall not be responsible for the accuracy or completeness of electronic copies of this plan sheet.

Caltrans now has a web site! To get to the web site, go to: http://www.dot.ca.gov

Caltrans Metric

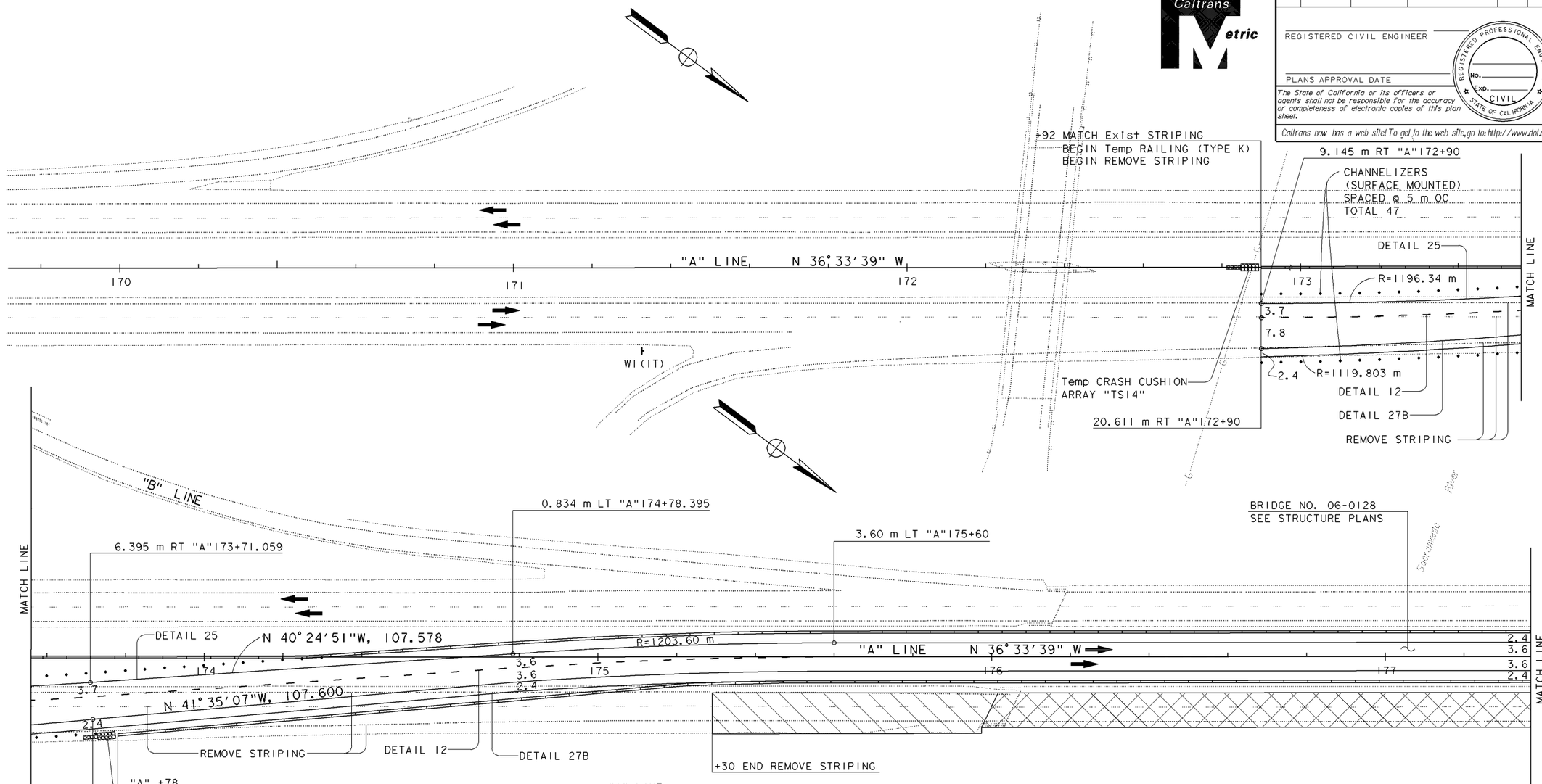

TEMPORARY RAILING (TYPE K) PLACEMENT

THIS PLAN ACCURATE FOR STAGE CONSTRUCTION ONLY.

STAGE CONSTRUCTION SHEET, EXAMPLE "B-2"

ALL DIMENSIONS ARE IN METERS UNLESS OTHERWISE SHOWN

STAGE 2

STAGE CONSTRUCTION AND TRAFFIC HANDLING PLAN

SCALE 1:500

SC-5

DATE | REVISED BY | DATE REVISED

CALCULATED/DESIGNED BY | CHECKED BY

PROJECT ENGINEER

STATE OF CALIFORNIA - DEPARTMENT OF TRANSPORTATION

DESIGN

Caltrans

10-APR-2001 dpm2_139.dgn 09:04

LAST REVISION 04-04-01 | DATE PLOTTED => 10-APR-2001 TIME PLOTTED => 09:04

FOR REDUCED PLANS ORIGINAL SCALE IS IN MILLIMETERS 0 20 40 60 80

USERNAME => trmikesl
DGN FILE => dpm2_139.dgn

CU 00000 | EA 000000

Return to Section 2 Table of Contents

DIST	COUNTY	ROUTE	KILOMETER POST TOTAL PROJECT	SHEET No	TOTAL SHEETS

REGISTERED CIVIL ENGINEER

PLANS APPROVAL DATE

REGISTERED PROFESSIONAL ENGINEER No. Exp. CIVIL STATE OF CALIFORNIA

The State of California or its officers or agents shall not be responsible for the accuracy or completeness of electronic copies of this plan sheet.

Caltrans now has a web site! To get to the web site, go to: http://www.dot.ca.gov

Caltrans Metric

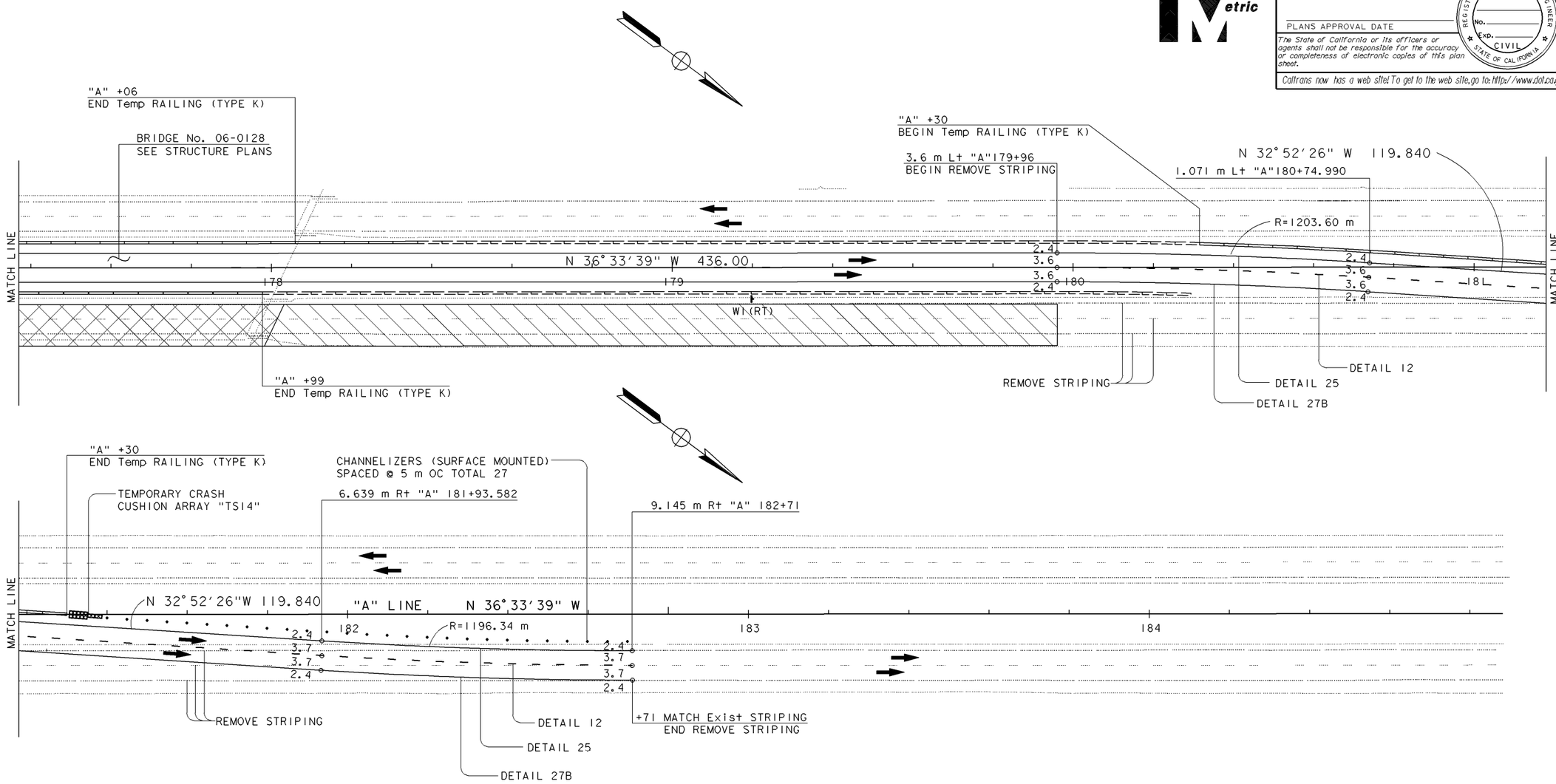

ALL DIMENSIONS ARE IN METERS
UNLESS OTHERWISE SHOWN

STAGE 2

STAGE CONSTRUCTION AND TRAFFIC HANDLING PLAN

SCALE 1:500

SC-6

THIS PLAN ACCURATE FOR STAGE CONSTRUCTION ONLY.

STAGE CONSTRUCTION SHEET, EXAMPLE "B-3"

DATE	REVISED BY	DATE REVISED
CALCULATED/ DESIGNED BY	CHECKED BY	

PROJECT ENGINEER

STATE OF CALIFORNIA - DEPARTMENT OF TRANSPORTATION

Caltrans

DESIGN

10-APR-2001 dpm2_140.dgn 09:05

LAST REVISION 04-04-01 | DATE PLOTTED => 10-APR-2001 TIME PLOTTED => 09:05

FOR REDUCED PLANS ORIGINAL SCALE IS IN MILLIMETERS 0 20 40 60 80

USERNAME => trmikesi
DGN FILE => dpm2_140.dgn

CU 00000 | EA 000000

Return to Section 2 Table of Contents

DIST	COUNTY	ROUTE	KILOMETER POST TOTAL PROJECT	SHEET No	TOTAL SHEETS

REGISTERED CIVIL ENGINEER

PLANS APPROVAL DATE

REGISTERED PROFESSIONAL ENGINEER No. Exp. CIVIL STATE OF CALIFORNIA

The State of California or its officers or agents shall not be responsible for the accuracy or completeness of electronic copies of this plan sheet.

Caltrans now has a web site! To get to the web site, go to: http://www.dot.ca.gov

Caltrans Metric

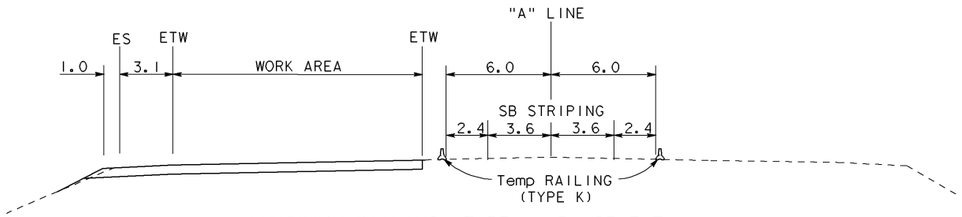

TEMPORARY RAILING (TYPE K) PLACEMENT
NO SCALE

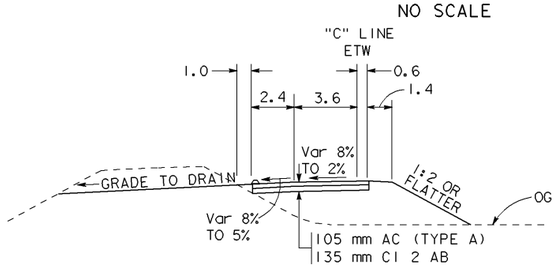

TEMPORARY RIVERSIDE AVE OFF-RAMP
Sta "C" 173+53.30 TO 175+63.71
(SEE PROFILE & SUPERELEVATION SHEETS)
NO SCALE

CURVE TABLE

No.	R	Δ	T	L
1	260.000	18° 4′ 53"	41.369	82.050
2	1195.32	3° 56′ 3"	41.05	82.08
3	1203.600	3° 51′ 56"	40.62	81.20

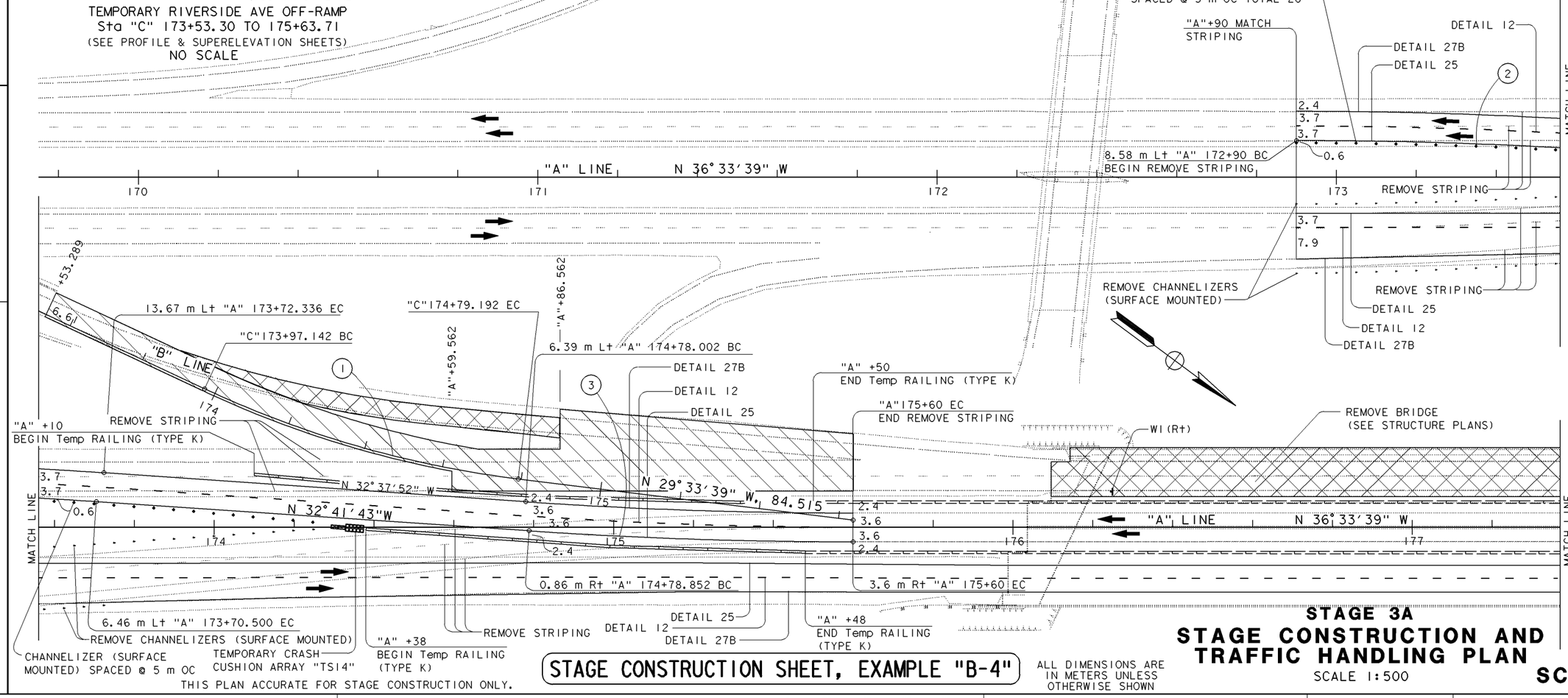

THIS PLAN ACCURATE FOR STAGE CONSTRUCTION ONLY.

STAGE CONSTRUCTION SHEET, EXAMPLE "B-4"

ALL DIMENSIONS ARE IN METERS UNLESS OTHERWISE SHOWN

STAGE 3A
STAGE CONSTRUCTION AND TRAFFIC HANDLING PLAN

SCALE 1:500

SC-7

DATE	REVISED BY	DATE REVISED

CALCULATED/ DESIGNED BY	CHECKED BY

PROJECT ENGINEER

STATE OF CALIFORNIA - DEPARTMENT OF TRANSPORTATION

Caltrans

DESIGN

10-APR-2001 dpm2_141.dgn 09:05

FOR REDUCED PLANS ORIGINAL SCALE IS IN MILLIMETERS 0 20 40 60 80

USERNAME => trmikesl
DGN FILE => dpm2_141.dgn

CU 00000 EA 000000

LAST REVISION 04-04-01

DATE PLOTTED => 10-APR-2001
TIME PLOTTED => 09:05

Return to Section 2 Table of Contents

DIST	COUNTY	ROUTE	KILOMETER POST TOTAL PROJECT	SHEET No	TOTAL SHEETS

REGISTERED CIVIL ENGINEER

PLANS APPROVAL DATE

REGISTERED PROFESSIONAL ENGINEER No. Exp. CIVIL STATE OF CALIFORNIA

The State of California or its officers or agents shall not be responsible for the accuracy or completeness of electronic copies of this plan sheet.

Caltrans now has a web site! To get to the web site, go to: http://www.dot.ca.gov

Caltrans Metric

CURVE TABLE

NO	R	Δ	T	L
4	1203.600	3° 50′ 38″	40.39	80.75
5	1196.34	3° 49′ 28″	39.94	79.86

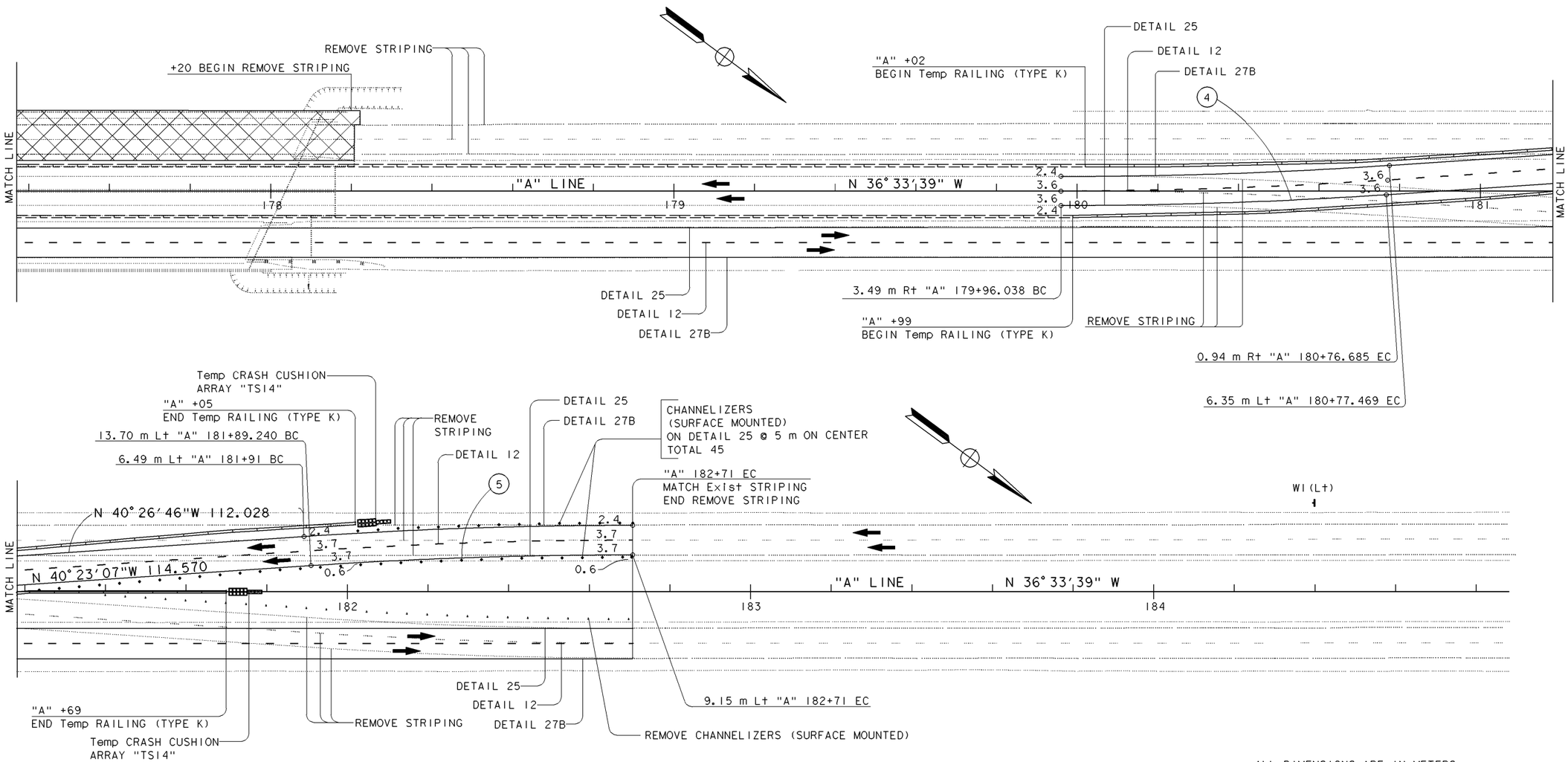

ALL DIMENSIONS ARE IN METERS
UNLESS OTHERWISE SHOWN

THIS PLAN ACCURATE FOR STAGE CONSTRUCTION ONLY.

STAGE CONSTRUCTION SHEET, EXAMPLE "B-5"

STAGE 3A

STAGE CONSTRUCTION AND TRAFFIC HANDLING PLAN

SCALE 1:500

SC-8

DATE | REVISED BY | DATE REVISED

CALCULATED/DESIGNED BY | CHECKED BY

PROJECT ENGINEER

STATE OF CALIFORNIA - DEPARTMENT OF TRANSPORTATION

DESIGN

Caltrans

10-APR-2001 dpm2_142.dgn 09:05

LAST REVISION 04-04-01 | DATE PLOTTED => 10-APR-2001 TIME PLOTTED => 09:05

FOR REDUCED PLANS ORIGINAL SCALE IS IN MILLIMETERS 0 20 40 60 80

USERNAME => trmikesi
DGN FILE => dpm2_142.dgn

CU 00000 | EA 000000

Return to Section 2 Table of Contents

DIST	COUNTY	ROUTE	KILOMETER POST TOTAL PROJECT	SHEET No	TOTAL SHEETS

REGISTERED CIVIL ENGINEER

PLANS APPROVAL DATE

REGISTERED PROFESSIONAL ENGINEER No. Exp. CIVIL STATE OF CALIFORNIA

The State of California or its officers or agents shall not be responsible for the accuracy or completeness of electronic copies of this plan sheet.

Caltrans now has a web site! To get to the web site, go to: http://www.dot.ca.gov

Caltrans Metric

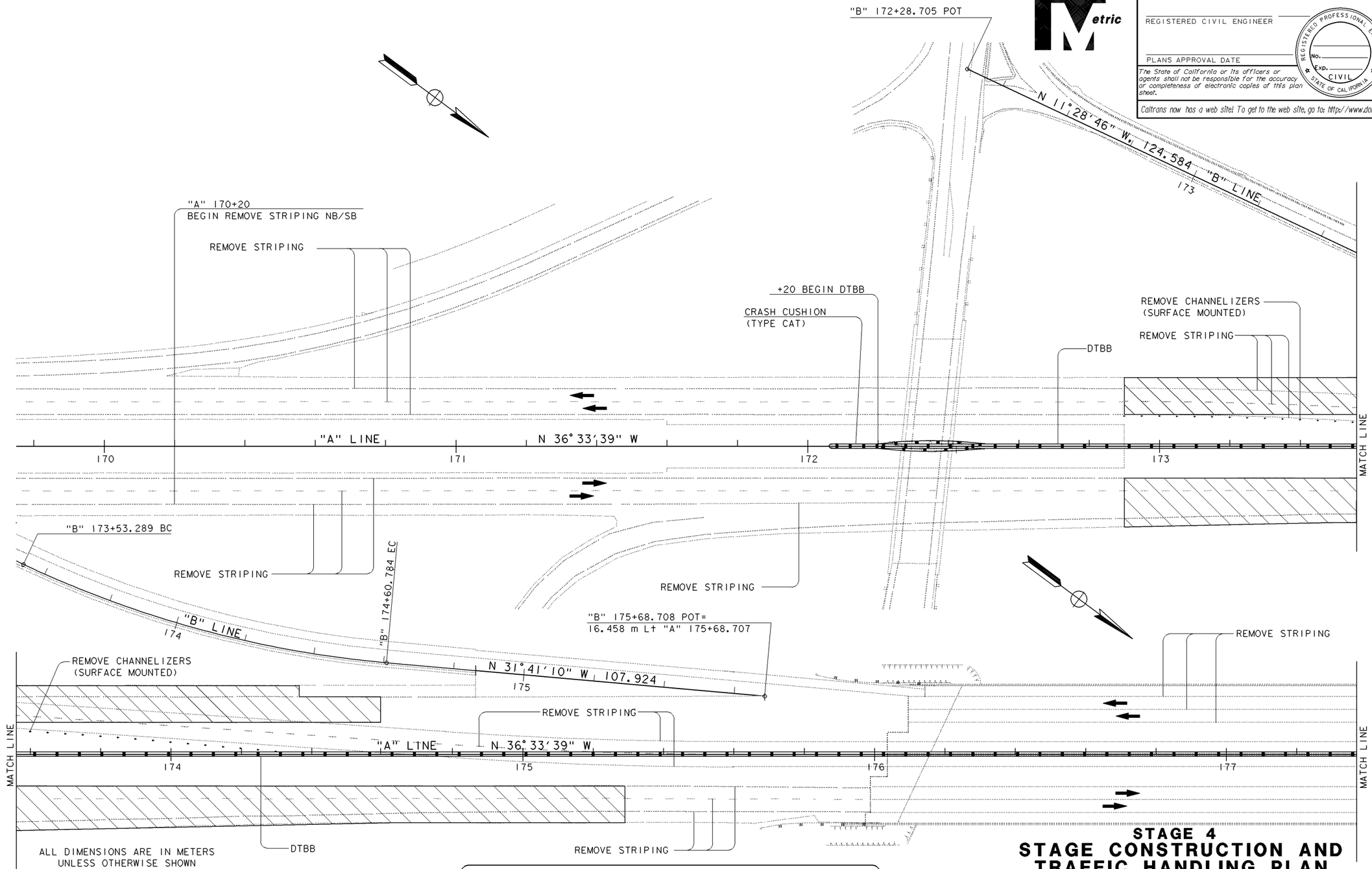

ALL DIMENSIONS ARE IN METERS
UNLESS OTHERWISE SHOWN

THIS PLAN ACCURATE FOR STAGE CONSTRUCTION ONLY.

STAGE CONSTRUCTION SHEET, EXAMPLE "B-6"

STAGE 4
STAGE CONSTRUCTION AND TRAFFIC HANDLING PLAN
SCALE 1:500

SC-13

DATE	REVISED BY	DATE REVISED
CALCULATED/ DESIGNED BY		
CHECKED BY		

PROJECT ENGINEER

STATE OF CALIFORNIA - DEPARTMENT OF TRANSPORTATION
DESIGN
Caltrans

10-APR-2001 dpm2_143.dgn
09:05

LAST REVISION 04-04-01
DATE PLOTTED => 10-APR-2001
TIME PLOTTED => 09:05

FOR REDUCED PLANS ORIGINAL SCALE IS IN MILLIMETERS 0 20 40 60 80

USERNAME => trmikesl
DGN FILE => dpm2_143.dgn

CU 00000 EA 000000

Return to Section 2 Table of Contents

DIST	COUNTY	ROUTE	KILOMETER POST TOTAL PROJECT	SHEET No	TOTAL SHEETS

REGISTERED CIVIL ENGINEER

PLANS APPROVAL DATE

REGISTERED PROFESSIONAL ENGINEER No. Exp. CIVIL STATE OF CALIFORNIA

The State of California or its officers or agents shall not be responsible for the accuracy or completeness of electronic copies of this plan sheet.

Caltrans now has a web site! To get to the web site, go to: http://www.dot.ca.gov

Caltrans Metric

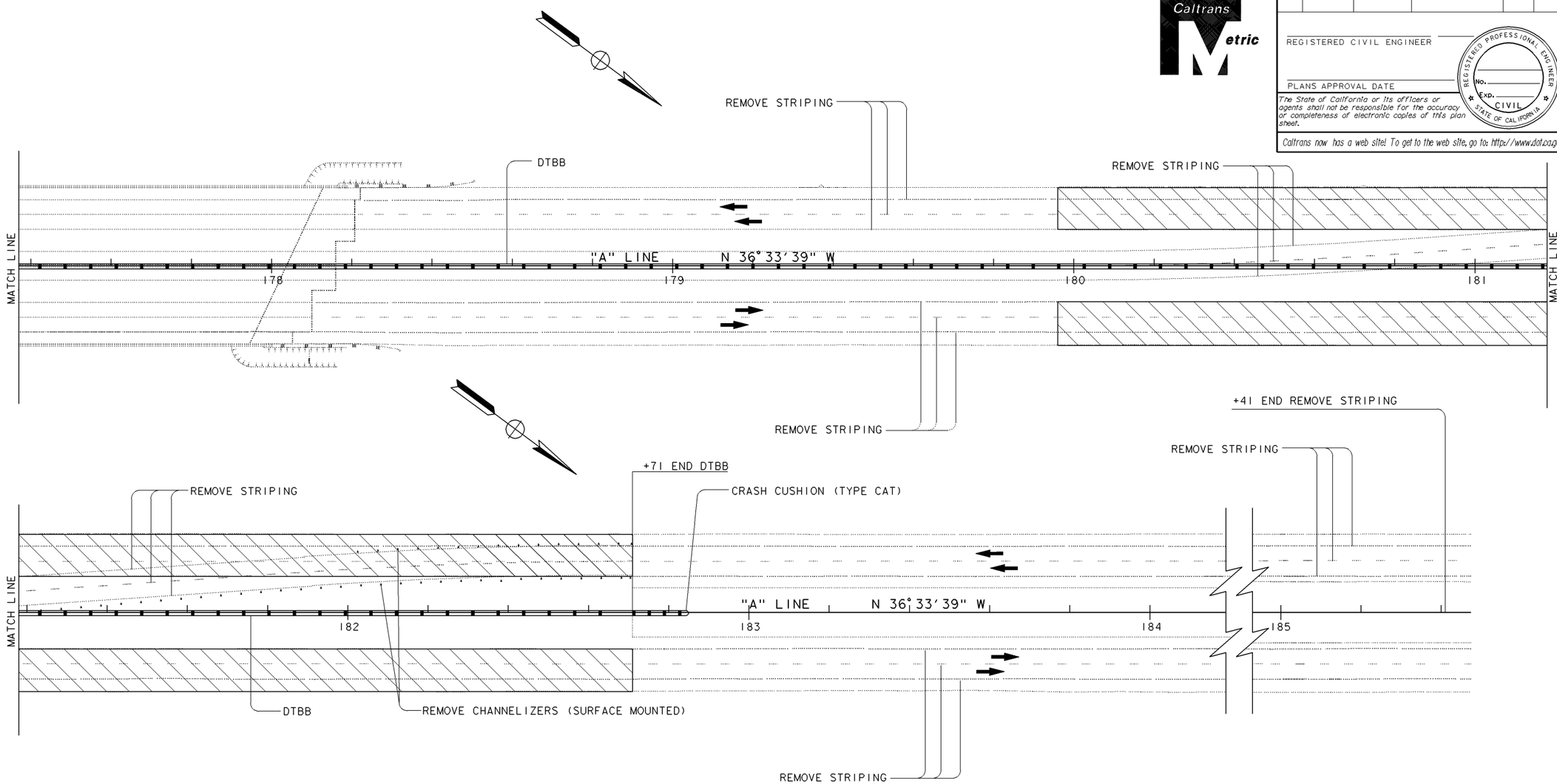

ALL DIMENSIONS ARE IN METERS
UNLESS OTHERWISE SHOWN

STAGE 4

STAGE CONSTRUCTION AND TRAFFIC HANDLING PLAN

SCALE 1:500

SC-14

THIS PLAN ACCURATE FOR STAGE CONSTRUCTION ONLY.

STAGE CONSTRUCTION SHEET, EXAMPLE "B-7"

DATE	REVISED BY	DATE REVISED
CALCULATED/ DESIGNED BY		
CHECKED BY		
PROJECT ENGINEER		

STATE OF CALIFORNIA - DEPARTMENT OF TRANSPORTATION

Caltrans **DESIGN**

10-APR-2001 dpm2_144.dgn 09:05

LAST REVISION 04-02-01 | DATE PLOTTED => 10-APR-2001 TIME PLOTTED => 09:05

FOR REDUCED PLANS ORIGINAL SCALE IS IN MILLIMETERS 0 20 40 60 80

USERNAME => trmlkesl
DGN FILE => dpm2_144.dgn

CU 00000 | EA 000000

Return to Section 2 Table of Contents

DIST	COUNTY	ROUTE	KILOMETER POST TOTAL PROJECT	SHEET No	TOTAL SHEETS

REGISTERED CIVIL ENGINEER

PLANS APPROVAL DATE

REGISTERED PROFESSIONAL ENGINEER No. Exp. CIVIL STATE OF CALIFORNIA

The State of California or its officers or agents shall not be responsible for the accuracy or completeness of electronic copies of this plan sheet.

Caltrans now has a web site! To get to the web site, go to: http://www.dot.ca.gov

CONSTRUCTION AREA SIGNS (STATIONARY MOUNTED)

SHEET No. (S)	CODE	SIGN MESSAGE	PANEL SIZE (mm)	No. OF POST AND SIZE	(*) EA	DESCRIPTION
SC-1 AND SC-4	C12	NARROW LANE	1219 x 1219	1 - 89 mm x 140 mm	4	STAGES 1A
SC-5 TO SC-12	W1 (R+)	REVERSE TURN SIGN (FIRST CURVE RIGHT)	1219 x 1219	1 - 89 mm x 140 mm	1	STAGES 2, 3A, 3B AND 3C
SC-5 TO SC-12	W1 (L+)	REVERSE TURN SIGN (FIRST CURVE LEFT)	1219 x 1219	1 - 89 mm x 140 mm	1	STAGES 3A, 3B AND 3C

NOTES:

1. (*) NUMBER OF SIGNS PER STAGE CONSTRUCTION.
2. SEE CONSTRUCTION AREA SIGNS, DETOUR LAYOUT AND TRAFFIC HANDLING PLANS FOR ADDITIONAL CONSTRUCTION AREA SIGNS.
3. EXACT SIGN LOCATION TO BE DETERMIED BY THE ENGINEER.

STAGE CONSTRUCTION SHEET, EXAMPLE "B-8"

STAGE CONSTRUCTION AND TRAFFIC HANDLING PLAN

SC-15

REVISED BY | DATE REVISED

CALCULATED/DESIGNED BY | CHECKED BY

PROJECT ENGINEER

STATE OF CALIFORNIA - DEPARTMENT OF TRANSPORTATION

Caltrans **DESIGN**

09:05 10-APR-2001 dpm2_145.dgn

LAST REVISION 04-04-01 | DATE PLOTTED => 10-APR-2001 TIME PLOTTED => 09:05

FOR REDUCED PLANS ORIGINAL SCALE IS IN MILLIMETERS 0 20 40 60 80

USERNAME => trmikesl
DGN FILE => dpm2_145.dgn

CU 00000 | EA 000000

Return to Section 2 Table of Contents

DIST	COUNTY	ROUTE	KILOMETER POST TOTAL PROJECT	SHEET No	TOTAL SHEETS

REGISTERED CIVIL ENGINEER

PLANS APPROVAL DATE

REGISTERED PROFESSIONAL ENGINEER No. Exp. CIVIL STATE OF CALIFORNIA

The State of California or its officers or agents shall not be responsible for the accuracy or completeness of electronic copies of this plan sheet.

Caltrans now has a web site! To get to the web site, go to: http://www.dot.ca.gov

Caltrans Metric

CONSTRUCTION AREA SIGNS (PORTABLE)

SIGN TYPE	SIGN MESSAGE	PANEL SIZE (mm)	EACH
C30	LANE CLOSED	762 x 762	2
C2	ROAD CLOSED	1219 x 762	1
W44	TWO WAY TRAFFIC	1219 x 1219	6
R63	DO NOT PASS	610 x 762	6
SW40	TRUCK CROSSING	914 x 914	4
W1 (Rt)	REVERSE TURN SIGN (1st curve right)	1219 x 1219	1
W1 (Lt)	REVERSE TURN SIGN (1st curve left)	1219 x 1219	1
W6 (25)	25 MPH	762 x 762	3
R7A	KEEP RIGHT	610 x 457	1

LEGEND

- SIGN
- TRAFFIC CONE
- BARRICADE
- DIRECTION OF TRAFFIC

NOTES:

1. LOCATIONS OF CONSTRUCTION AREA SIGNS SHOWN ARE APPROXIMATE. EXACT LOCATIONS WILL BE DETERMINED BY THE ENGINEER.
2. SEE CONSTRUCTION AREA SIGNS AND STAGE CONSTRUCTION PLANS FOR ADDITIONAL CONSTRUCTION AREA SIGNS.
3. ARROW BOARDS, FLASHING BEACONS AND SIGNS FOR THE "ROUTE 5 LANE REDUCTION" THAT CONFLICT WITH THE TEMP. MEDIAN CROSSOVER SIGNS SHALL BE TURNED OFF AND/OR COVERED AS DIRECTED BY THE ENGINEER.
4. SEE STANDARD PLANS FOR RAMP CHANNELIZATION DETAILS NOT SHOWN.
5. ALL CONSTRUCTION AREA SIGNS FOR THE TEMPORARY MEDIAN CROSSOVER SHALL BE CONSTRUCTED ON PORTABLE SIGN STANDS.
6. PORTABLE CHANGEABLE MESSAGE SIGNS SHALL BE PLACED APPROXIMATELY 800 IN ADVANCE OF ALL LANE CLOSURES FOR THE TEMP. MEDIAN CROSSOVERS AS DIRECTED BY THE ENGINEER.
7. INSTALL TEMPORARY CRASH CUSHIONS AT LOCATIONS AS DIRECTED BY THE ENGINEER.

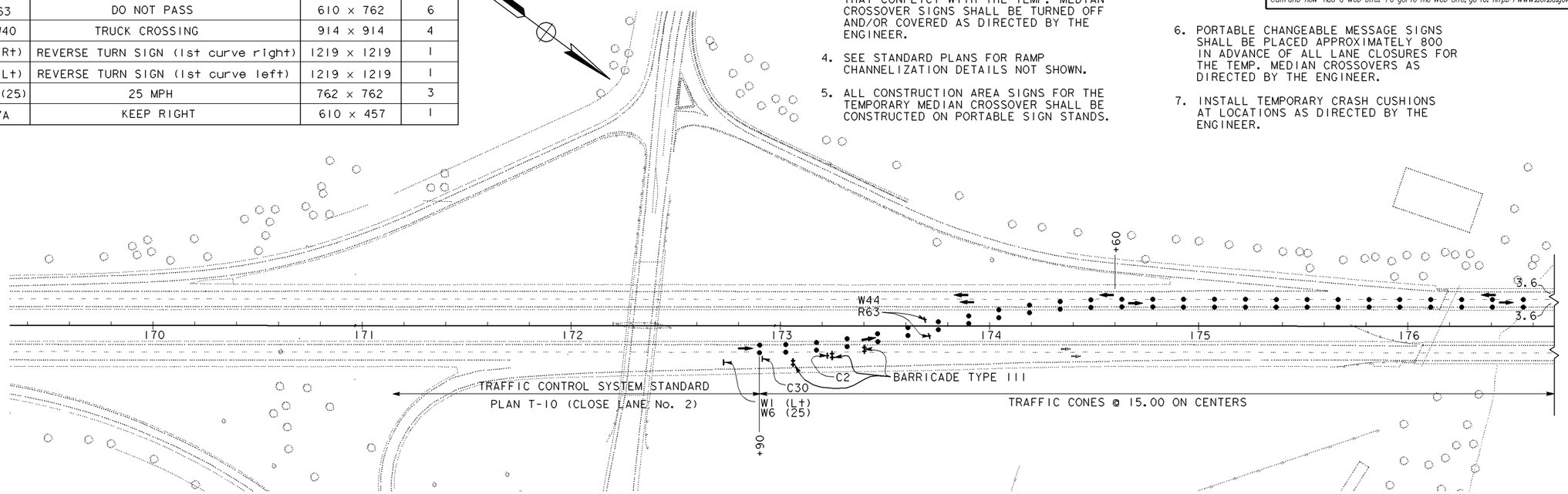

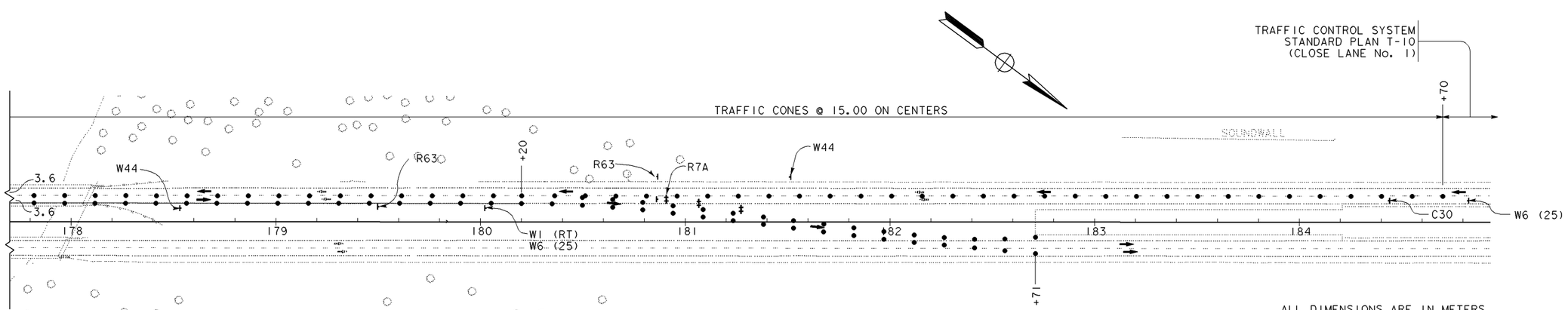

ALL DIMENSIONS ARE IN METERS UNLESS OTHERWISE SHOWN

TRAFFIC HANDLING PLAN
(TEMPORARY NB I-5 CLOSURE)

SCALE 1:1000

TH-1

THIS PLAN IS ACCURATE FOR TRAFFIC HANDLING ONLY.

DATE	REVISED BY	DATE REVISED

CALCULATED/DESIGNED BY

CHECKED BY

PROJECT ENGINEER

STATE OF CALIFORNIA - DEPARTMENT OF TRANSPORTATION

DESIGN

Caltrans

10-APR-2001 dpm2_146.dgn 09:05

LAST REVISION 04-02-01

DATE PLOTTED => 10-APR-2001
TIME PLOTTED => 09:05

FOR REDUCED PLANS ORIGINAL SCALE IS IN MILLIMETERS 0 20 40 60 80

USERNAME => trmlkesl
DGN FILE => dpm2_146.dgn

CU 03261 EA 260121

Return to Section 2 Table of Contents

CONSTRUCTION AREA SIGNS (PORTABLE)

SIGN TYPE	SIGN MESSAGE	PANEL SIZE (mm)	EACH
C30	LANE CLOSED	762 x 762	2
C2	ROAD CLOSED	1219 x 762	1
W44	TWO WAY TRAFFIC	1219 x 1219	6
SW40	TRUCK ENTERING *	914 x 914	2
SW40	TRUCK EXITING *	914 x 914	2
R63	DO NOT PASS	610 x 762	6
W1(Rt)	REVERSE TURN SIGN (1st curve right)	1219 x 1219	1
W1(Lt)	REVERSE TURN SIGN (1st curve left)	1219 x 1219	1
W6 (25)	25 MPH	762 x 762	3
R7A	KEEP RIGHT	610 x 457	1

* THESE SIGNS WILL BE PLACED AT LOCATIONS AS DETERMINED BY THE ENGINEER.

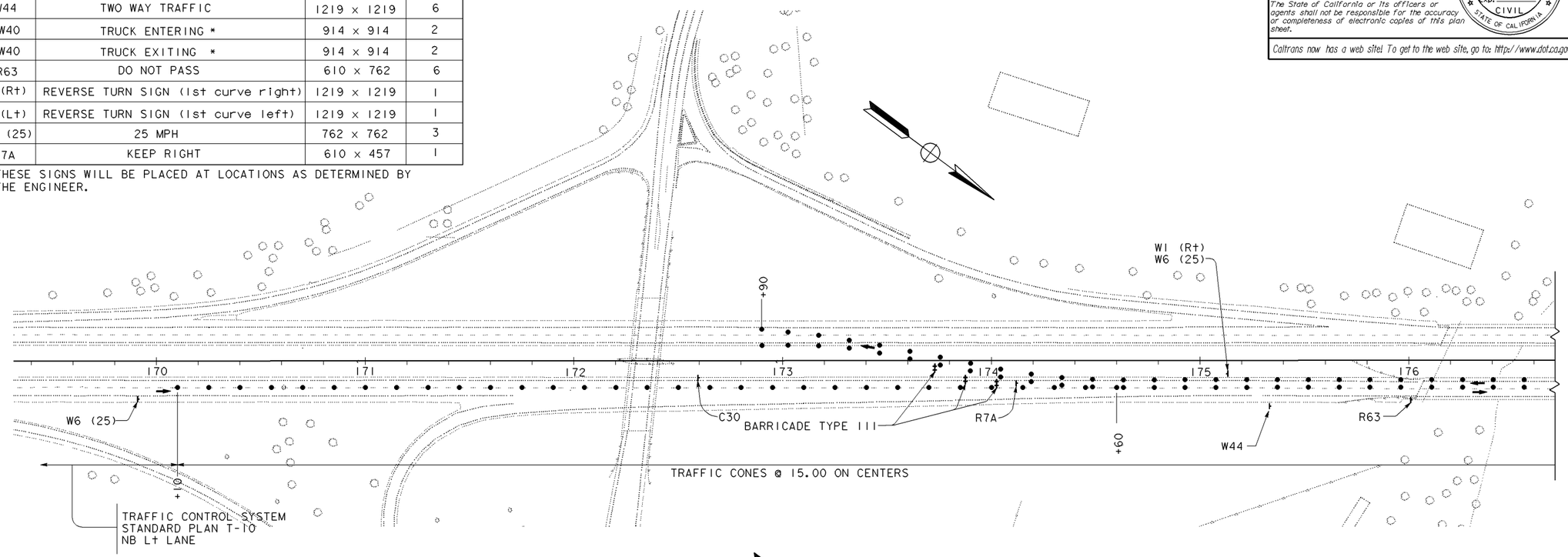

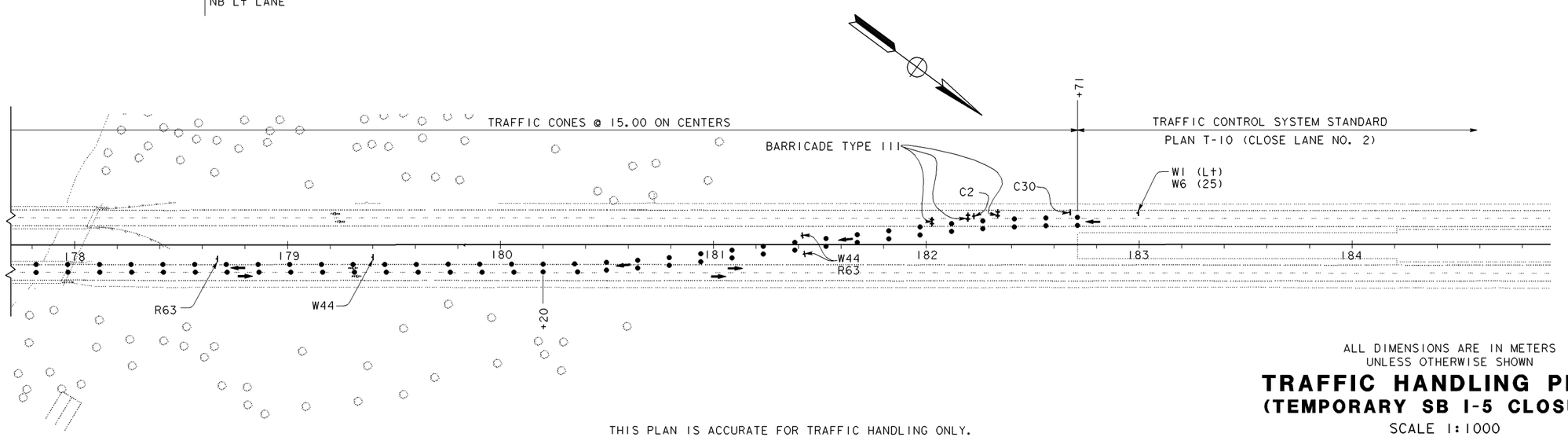

ALL DIMENSIONS ARE IN METERS
UNLESS OTHERWISE SHOWN

THIS PLAN IS ACCURATE FOR TRAFFIC HANDLING ONLY.

TRAFFIC HANDLING PLAN
(TEMPORARY SB I-5 CLOSURE)

SCALE 1:1000

TH-2

DIST	COUNTY	ROUTE	KILOMETER POST TOTAL PROJECT	SHEET No	TOTAL SHEETS

REGISTERED CIVIL ENGINEER

PLANS APPROVAL DATE

REGISTERED PROFESSIONAL ENGINEER No. Exp. CIVIL STATE OF CALIFORNIA

The State of California or its officers or agents shall not be responsible for the accuracy or completeness of electronic copies of this plan sheet.

Caltrans now has a web site! To get to the web site, go to: http://www.dot.ca.gov

Caltrans Metric

DATE	REVISED BY	DATE REVISED

CALCULATED/DESIGNED BY

CHECKED BY

PROJECT ENGINEER

STATE OF CALIFORNIA - DEPARTMENT OF TRANSPORTATION

DESIGN

Caltrans

09:06 10-APR-2001 dpm2_147.dgn

LAST REVISION 04-02-01 DATE PLOTTED => 10-APR-2001 TIME PLOTTED => 09:06

FOR REDUCED PLANS ORIGINAL SCALE IS IN MILLIMETERS 0 20 40 60 80

USERNAME => trmikesl
DGN FILE => dpm2_147.dgn

CU 03261 EA 260121

Return to Section 2 Table of Contents

NOTE:

1. DURING THE CROSSOVER THE R2, R2-4 AND R3 SIGNS WILL NOT BE PUT IN PLACE. THE PCMS WILL READ...

PILOT CARS IN USE	→	SLOW TRAFFIC AHEAD
1ST FRAME		2ND FRAME

2. SIGN MOUNTING TO BE APPROVED BY THE ENGINEER.

CONSTRUCTION AREA SIGNS (PORTABLE)

PAGE No	SIGN No	SIGN CODE	SIGN MESSAGE	PANEL SIZE mm x mm	QUANTITY EA
TH-3	H	C18MOD & R2-4	BRIDGE CONSTRUCTION AHEAD AND 55 ZONE AHEAD	1219 x 1219 & 914 x 1143	4
TH-3	I	C18MOD & R2	BRIDGE CONSTRUCTION AHEAD AND SPEED LIMIT 55	1219 x 1219 & 914 x 1143	4 (N*)
TH-3	J	C30	LANE CLOSED	762 x 762	4 (N)
TH-3	K	R3	END 55 SPEED LIMIT	914 x 1143	2

(N) FOR INFORMATION ONLY. INCLUDED IN THE T-10 SET UP.
(N*) FOR INFORMATION ONLY. C18MOD COUNTED IN THE T-10 SET UP; SO, ONLY COUNT THE R2.

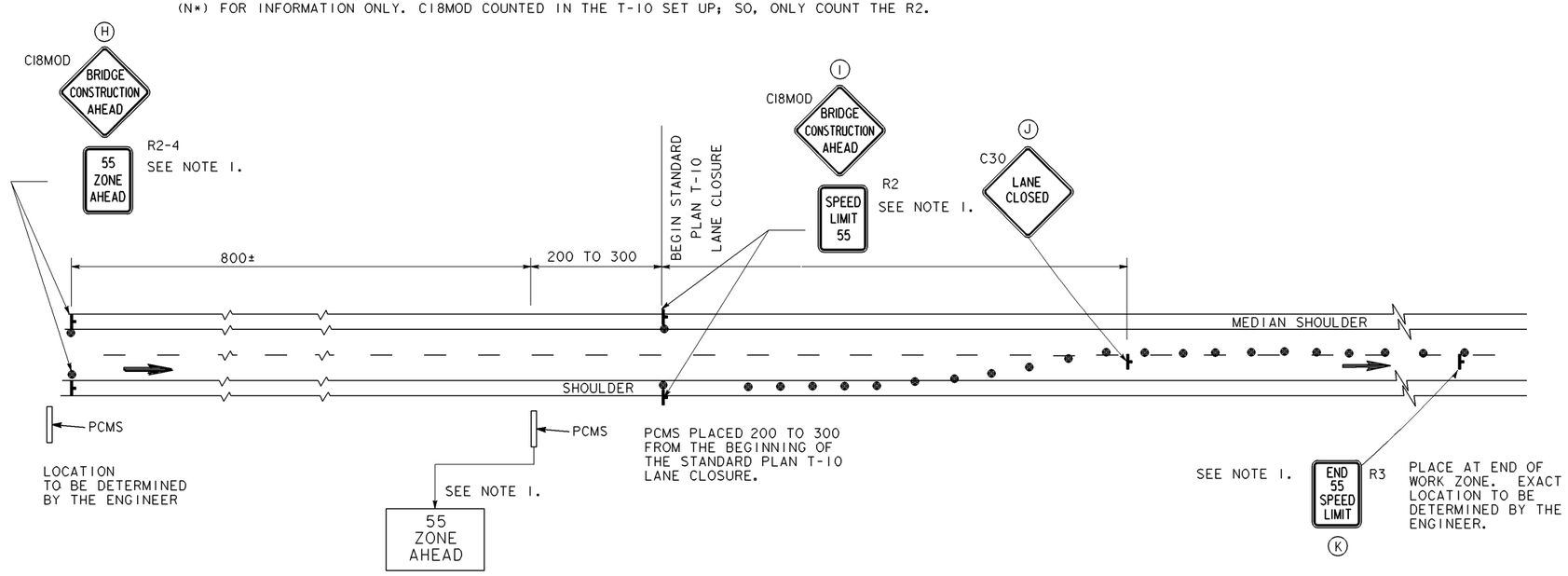

CONSTRUCTION AREA SIGNS

SIGNS TO SUPPLEMENT T10 LANE CLOSURE

ALL DIMENSIONS ARE IN METERS UNLESS OTHERWISE SHOWN

THIS PLAN ACCURATE FOR CONSTRUCTION AREA SIGNS ONLY.

TRAFFIC HANDLING PLAN

NO SCALE

TH-3

DIST	COUNTY	ROUTE	KILOMETER POST TOTAL PROJECT	SHEET No	TOTAL SHEETS

REGISTERED CIVIL ENGINEER

PLANS APPROVAL DATE

REGISTERED PROFESSIONAL ENGINEER No. Exp. CIVIL STATE OF CALIFORNIA

The State of California or its officers or agents shall not be responsible for the accuracy or completeness of electronic copies of this plan sheet.

Caltrans now has a web site! To get to the web site, go to: http://www.dot.ca.gov

Caltrans Metric

REVISED BY | DATE REVISED | DATE | CALCULATED/DESIGNED BY | CHECKED BY | PROJECT ENGINEER

STATE OF CALIFORNIA - DEPARTMENT OF TRANSPORTATION

DESIGN

Caltrans

10-APR-2001 dpm2_148.dgn 09:06

DATE PLOTTED => 10-APR-2001
TIME PLOTTED => 09:06

LAST REVISION 04-02-01

FOR REDUCED PLANS ORIGINAL SCALE IS IN MILLIMETERS 0 20 40 60 80

USERNAME => trmikesl
DGN FILE => dpm2_148.dgn

CU 03261 | EA 260121

Return to Section 2 Table of Contents

DIST	COUNTY	ROUTE	KILOMETER POST TOTAL PROJECT	SHEET No	TOTAL SHEETS

REGISTERED CIVIL ENGINEER

PLANS APPROVAL DATE

REGISTERED PROFESSIONAL ENGINEER No. Exp. CIVIL STATE OF CALIFORNIA

The State of California or its officers or agents shall not be responsible for the accuracy or completeness of electronic copies of this plan sheet.

Caltrans now has a web site! To get to the web site, go to: http://www.dot.ca.gov

Caltrans Metric

NOTES:

1. LOCATIONS OF CONSTRUCTION AREA SIGNS SHOWN ARE APPROXIMATE. EXACT LOCATIONS WILL BE DETERMINED BY THE ENGINEER.

2. SEE CONSTRUCTION AREA SIGNS, TRAFFIC HANDLING PLANS, AND STAGE CONSTRUCTION AND TRAFFIC HANDLING PLANS FOR ADDITIONAL CONSTRUCTION AREA SIGNS.

3. DURING THE SB OFF-RAMP CLOSURE, THE PCMS MESSAGE AT (E) SHOULD READ...

RIVERSIDE EXIT CLOSED	→	USE NORTH ST EXIT
1ST FRAME		2ND FRAME

4. DURING THE SB OFF-RAMP CLOSURE, THE PCMS MESSAGE AT (F) SHOULD READ...

FOR RIVERSIDE DETOUR	→	USE NEXT EXIT
1ST FRAME		2ND FRAME

CONSTRUCTION AREA SIGNS (PORTABLE)

CODE	SIGN MESSAGE	QUANTITY
C5(L†)	DETOUR (LEFT ARROW)	4
C5(R†)	DETOUR (RIGHT ARROW)	1
C7	END DETOUR	1
SC6	RAMP CLOSED	1

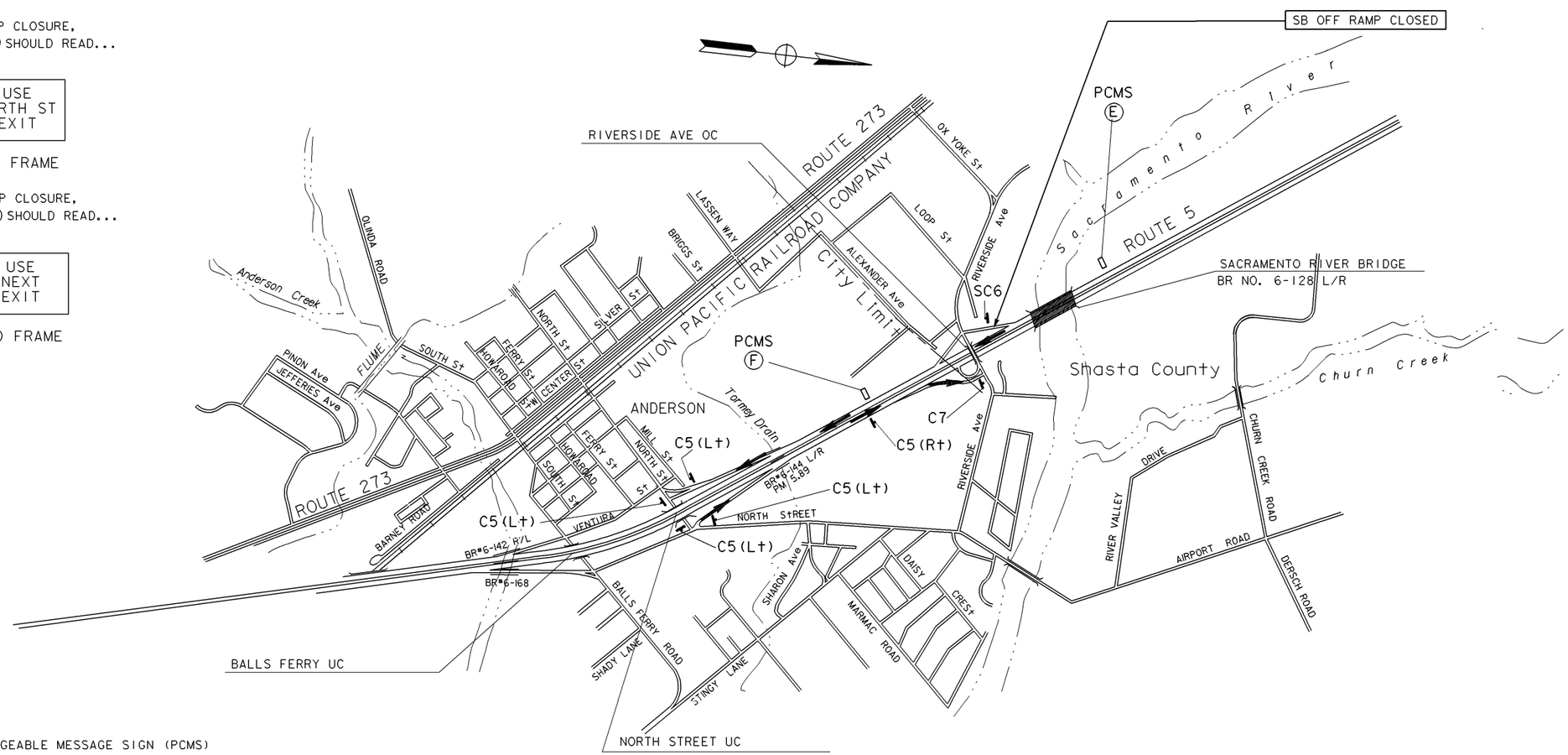

LEGEND

PORTABLE CHANGEABLE MESSAGE SIGN (PCMS)

NB - NORTHBOUND

SB - SOUTHBOUND

TRAFFIC CONE

PORTABLE SIGN

DIRECTION OF TRAFFIC

TRAFFIC DETOUR PLAN

SB OFF RAMP CLOSED AT RIVERSIDE AVENUE.
TAKE ANDERSON EXIT TO NORTH STREET.
TURN LEFT ON NORTH STREET.
TURN LEFT ON NB ON RAMP TO ROUTE 5.

ALL DIMENSIONS ARE IN METERS UNLESS OTHERWISE SHOWN

TRAFFIC HANDLING PLAN
DETOUR LAYOUT
(SOUTHBOUND OFF RAMP)

NO SCALE

THIS PLAN ACCURATE FOR DETOUR LAYOUT ONLY.

TH-4

DATE	REVISED BY	DATE REVISED
CALCULATED/ DESIGNED BY		
CHECKED BY		
PROJECT ENGINEER		

STATE OF CALIFORNIA - DEPARTMENT OF TRANSPORTATION

Caltrans DESIGN

10-APR-2001 dpm2_149.dgn 09:06

LAST REVISION 04-02-01 | DATE PLOTTED => 10-APR-2001 TIME PLOTTED => 09:06

FOR REDUCED PLANS ORIGINAL SCALE IS IN MILLIMETERS 0 20 40 60 80

USERNAME => trmikesl
DGN FILE => dpm2_149.dgn

CU 00000 | EA 000000

Return to Section 2 Table of Contents

NOTE:

DURING NB ON-RAMP CLOSURE, PCMS MESSAGE AT Ⓒ SHOULD READ...

I-5 NB ON RAMP CLOSED	→	USE DETOUR
IST FRAME		2ND FRAME

CONSTRUCTION AREA SIGNS (PORTABLE)

CODE	SIGN MESSAGE	QUANTITY
C5(L†)	DETOUR (LEFT ARROW)	5
C5(R†)	DETOUR (RIGHT ARROW)	2
C7	END DETOUR	1
G27-2(5)	I-5 SHIELD	2
G47	NORTH	2
SC3	DETOUR (UP ARROW)	1
SC6-3	RAMP CLOSED	1

Caltrans Metric

DIST	COUNTY	ROUTE	KILOMETER POST TOTAL PROJECT	SHEET No	TOTAL SHEETS

REGISTERED CIVIL ENGINEER

PLANS APPROVAL DATE

REGISTERED PROFESSIONAL ENGINEER NO. EXP. CIVIL STATE OF CALIFORNIA

The State of California or its officers or agents shall not be responsible for the accuracy or completeness of electronic copies of this plan sheet.

Caltrans now has a web site! To get to the web site, go to: http://www.dot.ca.gov

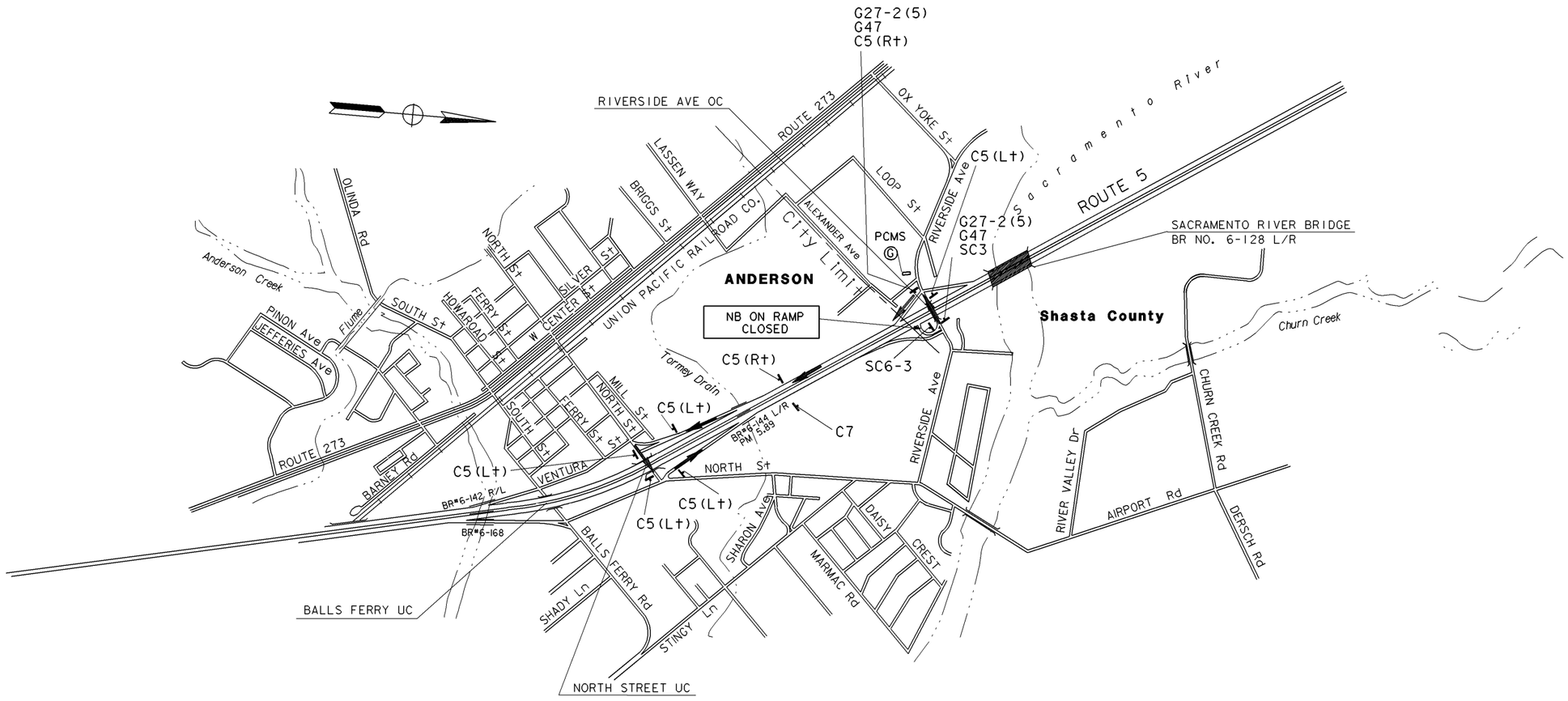

TRAFFIC DETOUR PLAN

NB ON RAMP CLOSED AT RIVERSIDE AVENUE.
TAKE SB RIVERSIDE AVENUE ON RAMP TO ANDERSON EXIT.
TURN LEFT ON NORTH STREET.
TURN LEFT ON NB ON RAMP TO ROUTE 5.

THIS PLAN ACCURATE FOR DETOUR LAYOUT ONLY.

ALL DIMENSIONS ARE IN METERS UNLESS OTHERWISE SHOWN

TRAFFIC HANDLING PLAN
DETOUR LAYOUT (NORTHBOUND ON RAMPS)

NO SCALE

TH-5

DATE	REVISED BY	DATE REVISED
CALCULATED/ DESIGNED BY		CHECKED BY

PROJECT ENGINEER

STATE OF CALIFORNIA - DEPARTMENT OF TRANSPORTATION

DESIGN

10-APR-2001 dpm2_150.dgn 09:06

LAST REVISION 04-04-01 | DATE PLOTTED => 10-APR-2001 TIME PLOTTED => 09:06

FOR REDUCED PLANS ORIGINAL SCALE IS IN MILLIMETERS 0 20 40 60 80

USERNAME => trmlkesl
DGN FILE => dpm2_150.dgn

CU 00000 | EA 000000

Return to Section 2 Table of Contents

2-2.16 Construction Area Signs

Temporary Signing

Construction area signs include all temporary signs required for the direction of public traffic through or around the work during construction. Construction area signs are to be shown on the Detour Plans, Stage Construction Plans, and/or Traffic Handling Plans. If Detour Plans, Stage Construction Plans, and/or Traffic Handling plans are not required for the project, the Construction Area Signs (e.g. "Road Construction Ahead" and "End Construction" signs) are to be shown on the Construction Area sign plans. Construction area signs also appear on the Standard Plans for traffic control systems ("T" Series). This Section 2-2.16 does not apply to those temporary signs illustrated on the "T" Series Standard Plans. Construction area signs on the "T" Series Standard Plans are not to be included in the construction area sign pay item. Utility facilities within the area where stationary mounted construction area signs are to be installed shall be shown on the plans.

Construction area sign quantities shall be summarized on the Construction Area Sign Plans and/or on the Traffic Handling Plans in tabular format giving the sign code number and size of sign panel. If locations of construction area signs can not also be shown graphically on the plans (e.g. seal coat projects without layouts sheets), the approximate location of the signs (station or kilometer post or other information to describe the location) shall be shown in the sign tabulation. A sign detail showing the sign message and message layout on the sign panel shall be included for all special construction area signs. If construction area signs require stationary mounting, they shall be designated as "stationary mounted" on the plans. If construction area signs are to be stationary mounted, the size and number of posts required shall be shown in the sign tabulation.

Each sheet of the Construction Area Sign Plans shall have the following note included on them: "This plan accurate for Construction Area Sign work only."

Return to Section 2 Table of Contents

DIST	COUNTY	ROUTE	KILOMETER POST TOTAL PROJECT	SHEET No	TOTAL SHEETS

REGISTERED CIVIL ENGINEER

PLANS APPROVAL DATE

REGISTERED PROFESSIONAL ENGINEER No. Exp. CIVIL STATE OF CALIFORNIA

The State of California or its officers or agents shall not be responsible for the accuracy or completeness of electronic copies of this plan sheet.

Caltrans now has a web site! To get to the web site, go to: http://www.dot.ca.gov

Caltrans Metric

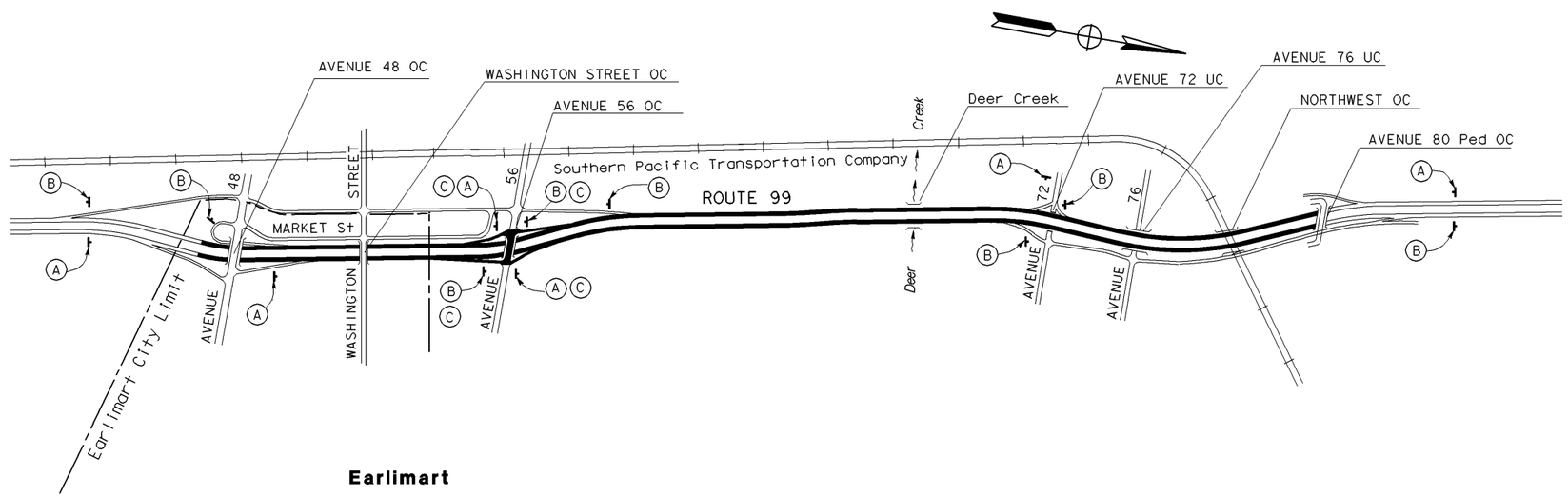

STATIONARY MOUNTED CONSTRUCTION AREA SIGNS

SIGN No.	SIGN CODE	PANEL SIZE (mm)	SIGN MESSAGE	No. OF POST AND SIZE (mm)	No. OF SIGNS
A	C18	1219 x 1219	ROAD CONSTRUCTION AHEAD	1- 89 x 140	6
B	C13	1219 x 457	END CONSTRUCTION	1- 89 x 89	8
C	SC6-3	1219 x 1219	RAMP CLOSED	1- 89 x 140	4
TOTAL					18

NOTE: SIGN LOCATIONS SHOWN ARE APPROXIMATE. EXACT LOCATIONS TO BE DETERMINED BY THE ENGINEER.

THIS PLAN ACCURATE FOR CONSTRUCTION AREA SIGN WORK ONLY.

CONSTRUCTION AREA SIGNS

NO SCALE

CS-1

STATE OF CALIFORNIA - DEPARTMENT OF TRANSPORTATION

Caltrans

DESIGN

PROJECT ENGINEER

CALCULATED/DESIGNED BY

CHECKED BY

DATE | REVISED BY | DATE REVISED

LAST REVISION 04-02-01 | DATE PLOTTED => 10-APR-2001 TIME PLOTTED => 09:06

FOR REDUCED PLANS ORIGINAL SCALE IS IN MILLIMETERS 0 20 40 60 80

USERNAME => trmikesl
DGN FILE => dpm2_153.dgn

CU 00000 | EA 000000

Return to Section 2 Table of Contents

DIST	COUNTY	ROUTE	KILOMETER POST TOTAL PROJECT	SHEET No	TOTAL SHEETS

REGISTERED CIVIL ENGINEER

PLANS APPROVAL DATE

REGISTERED PROFESSIONAL ENGINEER No. Exp. CIVIL STATE OF CALIFORNIA

The State of California or its officers or agents shall not be responsible for the accuracy or completeness of electronic copies of this plan sheet.

Caltrans now has a web site! To get to the web site, go to: http://www.dot.ca.gov

Caltrans Metric

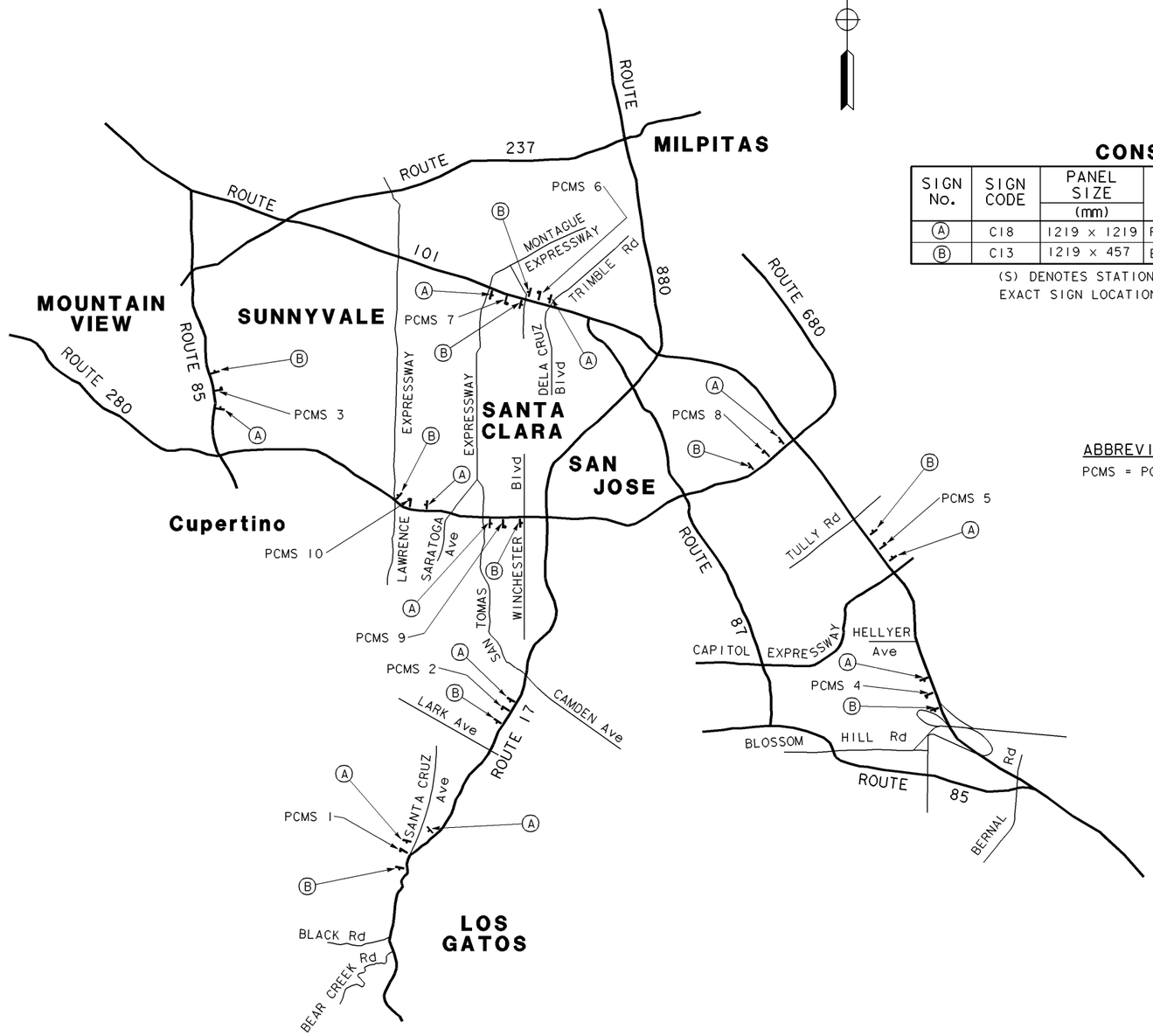

CONSTRUCTION AREA SIGNS

SIGN No.	SIGN CODE	PANEL SIZE (mm)	SIGN MESSAGE	No. OF POST AND SIZE	No. OF SIGNS
A	C18	1219 x 1219	ROAD CONSTRUCTION AHEAD	1-89 mm x 140 mm (S)	11
B	C13	1219 x 457	END CONSTRUCTION	1-89 mm x 89 mm (S)	10

(S) DENOTES STATIONARY MOUNTED SIGN.
EXACT SIGN LOCATION TO BE DETERMINED BY THE ENGINEER.

ABBREVIATION

PCMS = PORTABLE CHANGABLE MESSAGE SIGN

THIS PLAN ACCURATE FOR CONSTRUCTION AREA SIGN WORK ONLY.

CONSTRUCTION AREA SIGNS

NO SCALE

CS-1

STATE OF CALIFORNIA - DEPARTMENT OF TRANSPORTATION
Caltrans
DESIGN

PROJECT ENGINEER | CHECKED BY | CALCULATED/DESIGNED BY | DATE | REVISED BY | DATE REVISED

LAST REVISION 04-02-01 | DATE PLOTTED => 10-APR-2001 | TIME PLOTTED => 09:06

FOR REDUCED PLANS ORIGINAL SCALE IS IN MILLIMETERS 0 20 40 60 80

USERNAME => trmikesi
DGN FILE => dpm2_154.dgn

CU 00000 | EA 000000

Return to Section 2 Table of Contents

2-2.17 Pavement Delineation Plans, Details and Quantities

The plans shall include final traffic lines and pavement markings and pavement markers; and may include object markers, kilometer post markers, channelizers and delineators. Lines and pavement markings shall include lanelines, edgelines, channelizing lines at exit and entrance ramp gores, crosswalks, limit lines (stop line), arrows, and any other appropriate delineation. Lane widths shall be indicated.

The limits and detail number for each line of markings shall be shown on the plans. The detail numbers are those shown in the Standard Plans. Where the details shown on the Standard Plans do not fit a particular situation, special details for the particular situation shall be shown as part of the plans.

Details of standard pavement markings are included in the Standard Plans.

A summary of quantities for the items of traffic lines, pavement markings, pavement markers, delineators, channelizers, and markers (object and kilometer post) shall be included in the project plans. The summary of pavement delineation quantities should accompany the pavement delineation plans. Entries within the tabular format should be referenced to a line and station.

Temporary pavement delineation, if required, should be included in the Stage Construction and/ or Traffic Handling Plans.

Each sheet of the Pavement Delineation Plans shall have the following note included on them: “This plan accurate for Pavement Delineation work only.”

Return to Section 2 Table of Contents

Sheet PD-1 should contain Notes, Abbreviations, and Legend applicable to Pavement Delineation Plans.

DIST	COUNTY	ROUTE	KILOMETER POST TOTAL PROJECT	SHEET No	TOTAL SHEETS

REGISTERED CIVIL ENGINEER

PLANS APPROVAL DATE

REGISTERED PROFESSIONAL ENGINEER No. Exp. CIVIL STATE OF CALIFORNIA

The State of California or its officers or agents shall not be responsible for the accuracy or completeness of electronic copies of this plan sheet.

Caltrans now has a web site! To get to the web site, go to: http://www.dot.ca.gov

Caltrans Metric

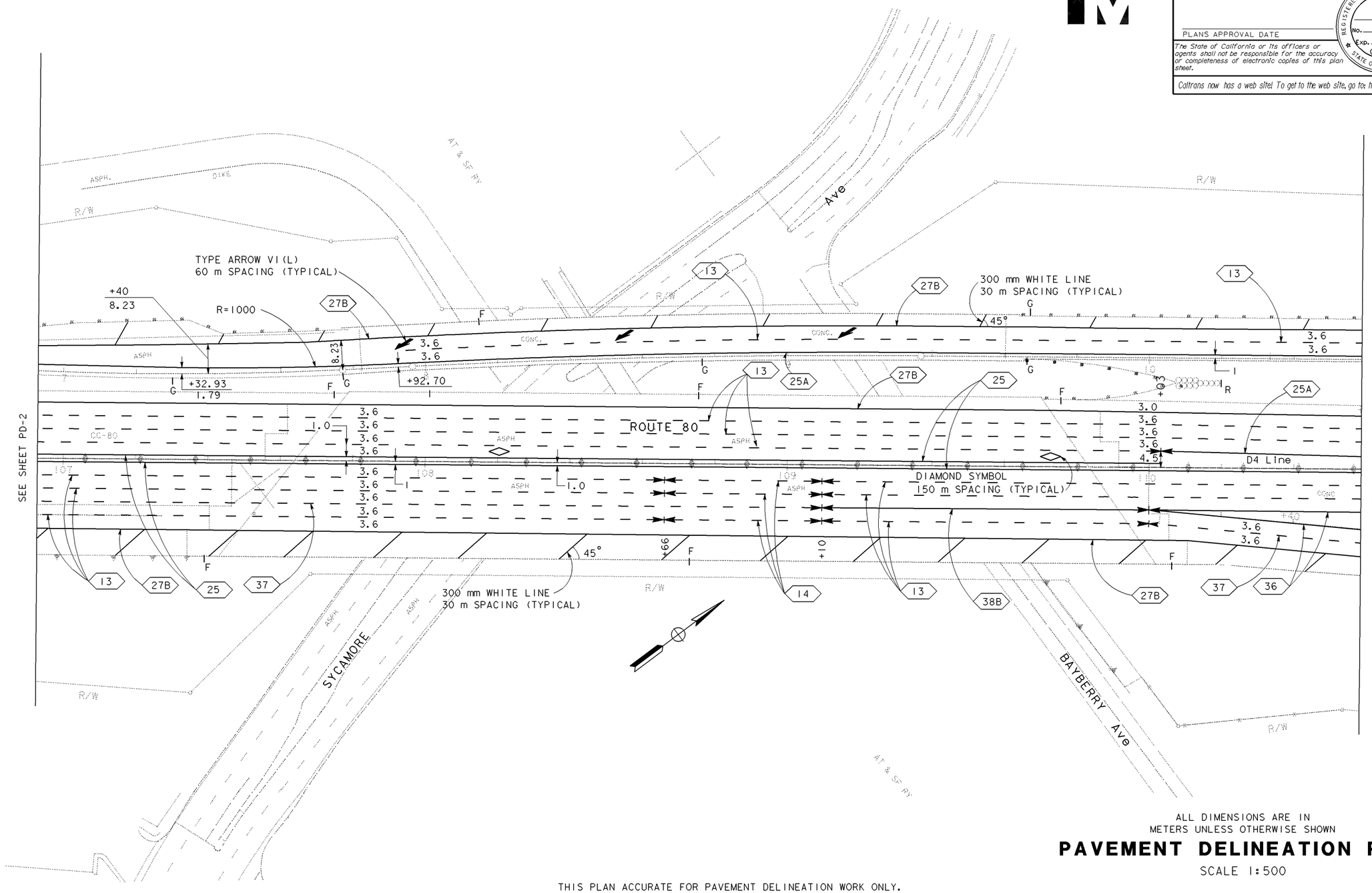

ALL DIMENSIONS ARE IN METERS UNLESS OTHERWISE SHOWN

PAVEMENT DELINEATION PLAN

SCALE 1:500

THIS PLAN ACCURATE FOR PAVEMENT DELINEATION WORK ONLY.

PD-3

DATE	REVISED BY	DATE REVISED

CALCULATED/DESIGNED BY

CHECKED BY

PROJECT ENGINEER

STATE OF CALIFORNIA - DEPARTMENT OF TRANSPORTATION

Caltrans PROJECT DEVELOPMENT

LAST REVISION 04-02-01

DATE PLOTTED => 10-APR-2001
TIME PLOTTED => 09:06

FOR REDUCED PLANS ORIGINAL SCALE IS IN MILLIMETERS 0 20 40 60 80

USERNAME => trmikesl
DGN FILE => dpm2_157.dgn

CU 00000 EA 000000

Return to Section 2 Table of Contents

DIST	COUNTY	ROUTE	KILOMETER POST TOTAL PROJECT	SHEET No	TOTAL SHEETS

Caltrans Metric

REGISTERED CIVIL ENGINEER

PLANS APPROVAL DATE

REGISTERED PROFESSIONAL ENGINEER No. Exp. CIVIL STATE OF CALIFORNIA

The State of California or its officers or agents shall not be responsible for the accuracy or completeness of electronic copies of this plan sheet.

Caltrans now has a web site! To get to the web site, go to: http://www.dot.ca.gov

PAVEMENT DELINEATION QUANTITIES

SHEET No.	STATION LIMITS	LOCATION	DETAIL No. OR PAVEMENT MARKING	REMOVE PAVEMENT MARKER (N)	REMOVE PAINTED TRAFFIC STRIPE		PAVEMENT MARKER				PAINT TRAFFIC STRIPE (2-COAT)		PAINT PAVEMENT MARKING (2-COAT)	THERMOPLASTIC TRAFFIC STRIPE			THERMOPLASTIC PAVEMENT MARKING
							NON-REFLECTIVE	RETROREFLECTIVE									
					100 mm	200 mm	TYPE A	TYPE C	TYPE G	TYPE H	100 mm YELLOW	100 mm WHITE		100 mm WHITE	200 mm WHITE	200 mm WHITE (BROKEN 3.66-0.92)	
				EA	m		EA				m		m^2	m			m^2
PD-1	C4 95+15 to C4 101+80	Rt,Lt	13	520			580		145								
PD-1	C4 100+18 to C4 100+61	Rt	14				36	12									
PD-1	C4 98+15 to C4 101+80	Rt,Lt	25	52						52	730						
PD-1	C4 98+15 to C4 101+80	Lt	37	80					80							365	
PD-1	C4 98+15 to C4 101+80	Rt,Lt	27B									730					
PD-1	C4 98+15 to C4 101+80	Rt,Lt	DIAMOND SYMBOL														1.02
PD-2	C4 105+42 to C4 106+38	Lt	25A	26						14	96						
PD-2	C4 101+80 to C4 106+38	Rt,Lt	13	629			736		190								
PD-2	C4 101+80 to C4 106+38	Rt,Lt	37	28				8	80							396	
PD-2	C4 101+80 to C4 106+38	Rt,Lt	27B									1010					
PD-2	C4 101+80 to C4 106+38	Rt,Lt	25	64						64	916						
PD-2	C4 104+55 to C4 105+42	Lt	36A	44					12					87	87		
PD-2	C4 101+80 to C4 106+38	Rt,Lt	DIAMOND SYMBOL														1.02
PD-2	C4 101+80 to C4 106+38	Rt,Lt	300 mm WHITE LINE										6.6				
PD-3	C4 106+38 to D4 1+22	Rt,Lt	13	710			764		197								
PD-3	C4 106+38 to D4 1+22	Rt	37					8	74							365	
PD-3	C4 108+66 to C4 109+10	Rt	14				36	12									
PD-3	C4 106+38 to D4 1+22	Rt,Lt	27B		491							1383					
PD-3	D4 0+29 to D4 1+11	Rt	36	10					24						165		
PD-3	C4 106+38 to D4 1+22	Rt,Lt	25	64	497					58	823						
PD-3	C4 106+38 to D4 1+22	Rt,Lt	25A	39						78	560						
PD-3	C4 109+10 to D4 0+29	Rt	38B						26						91		
PD-3	C4 106+38 to D4 1+22	Lt	VI(L) ARROW														3.90
PD-3	C4 106+38 to D4 1+22	Lt	DIAMOND SYMBOL														1.02
PD-3	C4 106+38 to D4 1+22	Rt,Lt	300 mm WHITE LINE										67.4				
PD-4	D4 1+22 to D4 3+89	Rt,Lt	13	480			380		98								
PD-4	D4 1+22 to D4 3+89	Rt,Lt	27B		341							1112					
PD-4	D4 1+22 to D4 3+05	Rt,Lt	25A	48						65	436						
PD-4	D4 1+22 to D4 3+89	Rt,Lt	25	46	341					44	610						
PD-4	D4 1+68 to D4 2+93	Lt	36	38					26						162		
PD-4	D4 1+22 to D4 2+13	Rt	37					8	12							91	
PD-4	D4 2+13 to D4 3+05	Rt	38B						26						92		
PD-4	D4 1+22 to A 0+61	Rt,Lt	300 mm WHITE LINE										23.1				
	SUBTOTAL			2878	1670		2532	48	990	375	4171	4235	97.1	87	597	1217	
	SHEET TOTAL			2878	1670		2532	1413			8406		97.1	87	597	1217	6.96

(N) - NOT A SEPARATE PAY ITEM, FOR INFORMATION ONLY.

PAVEMENT DELINEATION QUANTITIES

PD-8

STATE OF CALIFORNIA - DEPARTMENT OF TRANSPORTATION

Caltrans DESIGN

PROJECT ENGINEER

CALCULATED/DESIGNED BY

CHECKED BY

REVISED BY

DATE REVISED

DATE

LAST REVISION 04-02-01

DATE PLOTTED => 10-APR-2001
TIME PLOTTED => 09:06

FOR REDUCED PLANS ORIGINAL SCALE IS IN MILLIMETERS 0 20 40 60 80

USERNAME => trmikesl
DGN FILE => dpm2_158.dgn

CU 00000

EA 000000

Return to Section 2 Table of Contents

NOTE:

1. FOR COMPLETE RIGHT OF WAY AND ACCURATE ACCESS DATA, SEE RIGHT OF WAY RECORD MAPS AT DISTRICT OFFICE.

DIST	COUNTY	ROUTE	KILOMETER POST TOTAL PROJECT	SHEET No	TOTAL SHEETS

REGISTERED CIVIL ENGINEER

PLANS APPROVAL DATE

REGISTERED PROFESSIONAL ENGINEER No. Exp. CIVIL STATE OF CALIFORNIA

The State of California or its officers or agents shall not be responsible for the accuracy or completeness of electronic copies of this plan sheet.

Caltrans now has a web site! To get to the web site, go to: http://www.dot.ca.gov

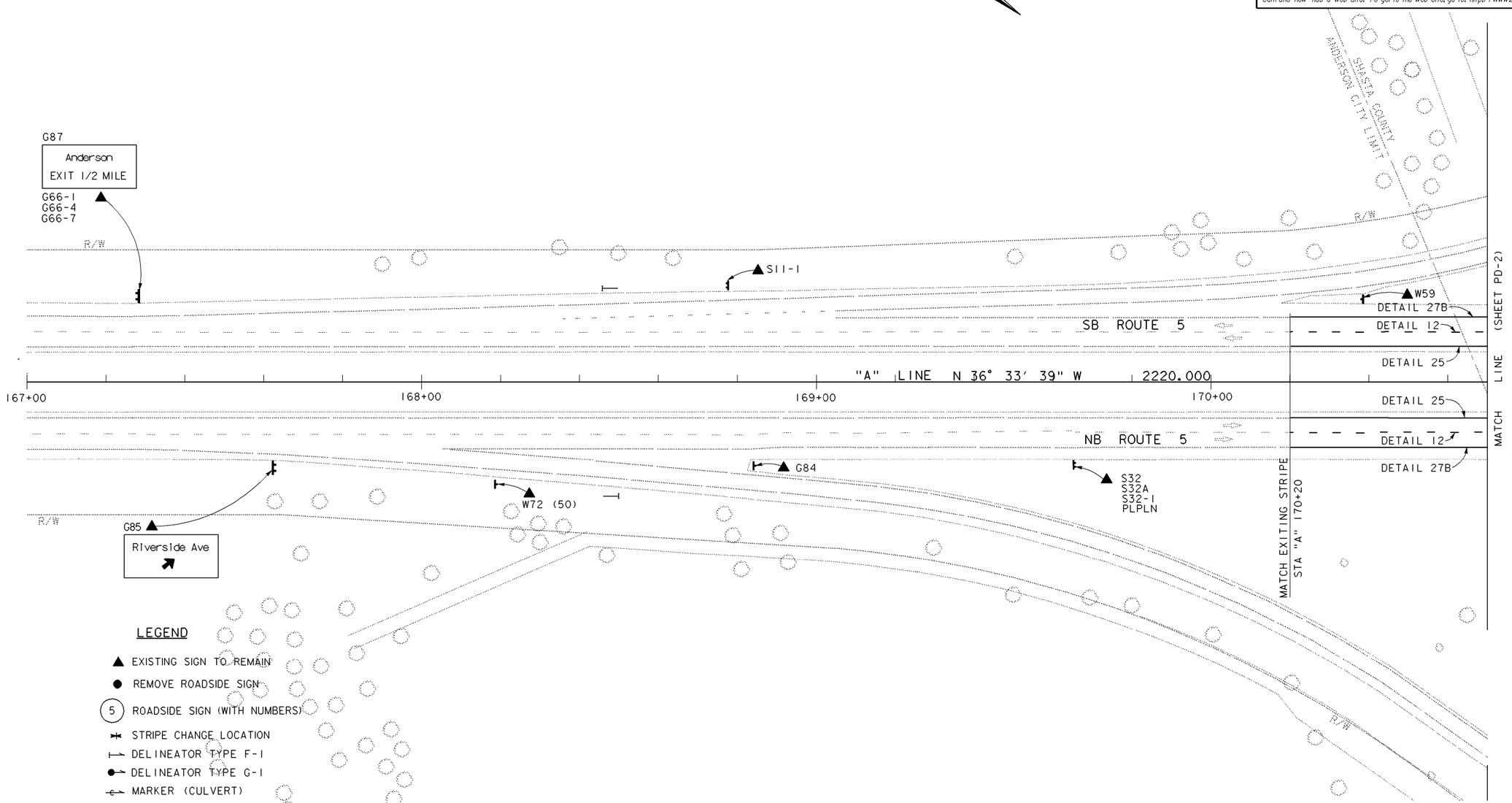

LEGEND

- ▲ EXISTING SIGN TO REMAIN
- ● REMOVE ROADSIDE SIGN
- (5) ROADSIDE SIGN (WITH NUMBERS)
- STRIPE CHANGE LOCATION
- DELINEATOR TYPE F-1
- DELINEATOR TYPE G-1
- MARKER (CULVERT)
- KILOMETER POST MARKER
- DIRECTION OF TRAFFIC FLOW

THIS PLAN ACCURATE FOR PAVEMENT DELINEATION AND SIGNING ONLY

ALL DIMENSIONS ARE IN METERS UNLESS OTHERWISE SHOWN

PAVEMENT DELINEATION AND SIGN PLAN

SCALE 1:500

PD-1

DATE	REVISED BY	DATE REVISED

CALCULATED/DESIGNED BY RER

CHECKED BY

PROJECT ENGINEER

STATE OF CALIFORNIA - DEPARTMENT OF TRANSPORTATION

Caltrans

DESIGN

LAST REVISION 04-02-01

DATE PLOTTED => 10-APR-2001
TIME PLOTTED => 09:06

FOR REDUCED PLANS ORIGINAL SCALE IS IN MILLIMETERS 0 20 40 60 80

USERNAME => trmikesl
DGN FILE => dpm2_159.dgn

CU 00000 EA 000000

Return to Section 2 Table of Contents

NOTE: FOR COMPLETE RIGHT OF WAY AND ACCURATE ACCESS DATA, SEE RIGHT OF WAY RECORD MAPS AT DISTRICT OFFICE.

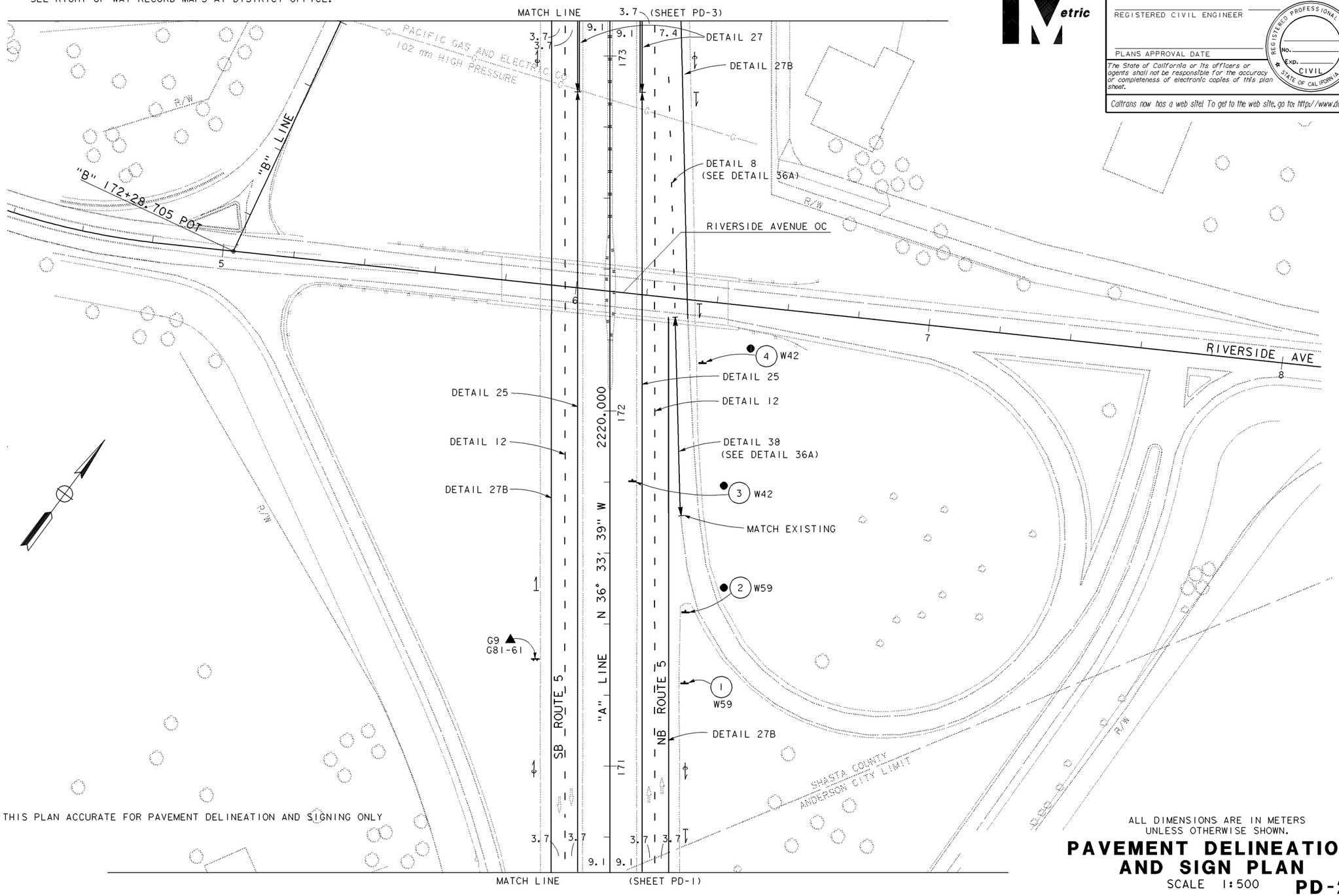

THIS PLAN ACCURATE FOR PAVEMENT DELINEATION AND SIGNING ONLY

ALL DIMENSIONS ARE IN METERS UNLESS OTHERWISE SHOWN.

PAVEMENT DELINEATION AND SIGN PLAN

SCALE 1:500

PD-2

DIST	COUNTY	ROUTE	KILOMETER POST TOTAL PROJECT	SHEET No	TOTAL SHEETS

REGISTERED CIVIL ENGINEER

PLANS APPROVAL DATE

REGISTERED PROFESSIONAL ENGINEER NO. EXP. CIVIL STATE OF CALIFORNIA

The State of California or its officers or agents shall not be responsible for the accuracy or completeness of electronic copies of this plan sheet.

Caltrans now has a web site! To get to the web site, go to: http://www.dot.ca.gov

Caltrans Metric

STATE OF CALIFORNIA - DEPARTMENT OF TRANSPORTATION

Caltrans DESIGN

PROJECT ENGINEER

CALCULATED/DESIGNED BY

CHECKED BY

DATE REVISED BY

DATE REVISED

LAST REVISION 04-02-01

DATE PLOTTED => 10-APR-2001
TIME PLOTTED => 09:06

FOR REDUCED PLANS ORIGINAL SCALE IS IN MILLIMETERS 0 20 40 60 80

USERNAME => trmikesl
DGN FILE => dpm2_160.dgn

CU 00000

EA 000000

Return to Section 2 Table of Contents

NOTE: FOR COMPLETE RIGHT OF WAY AND ACCURATE ACCESS DATA, SEE RIGHT OF WAY RECORD MAPS AT DISTRICT OFFICE.

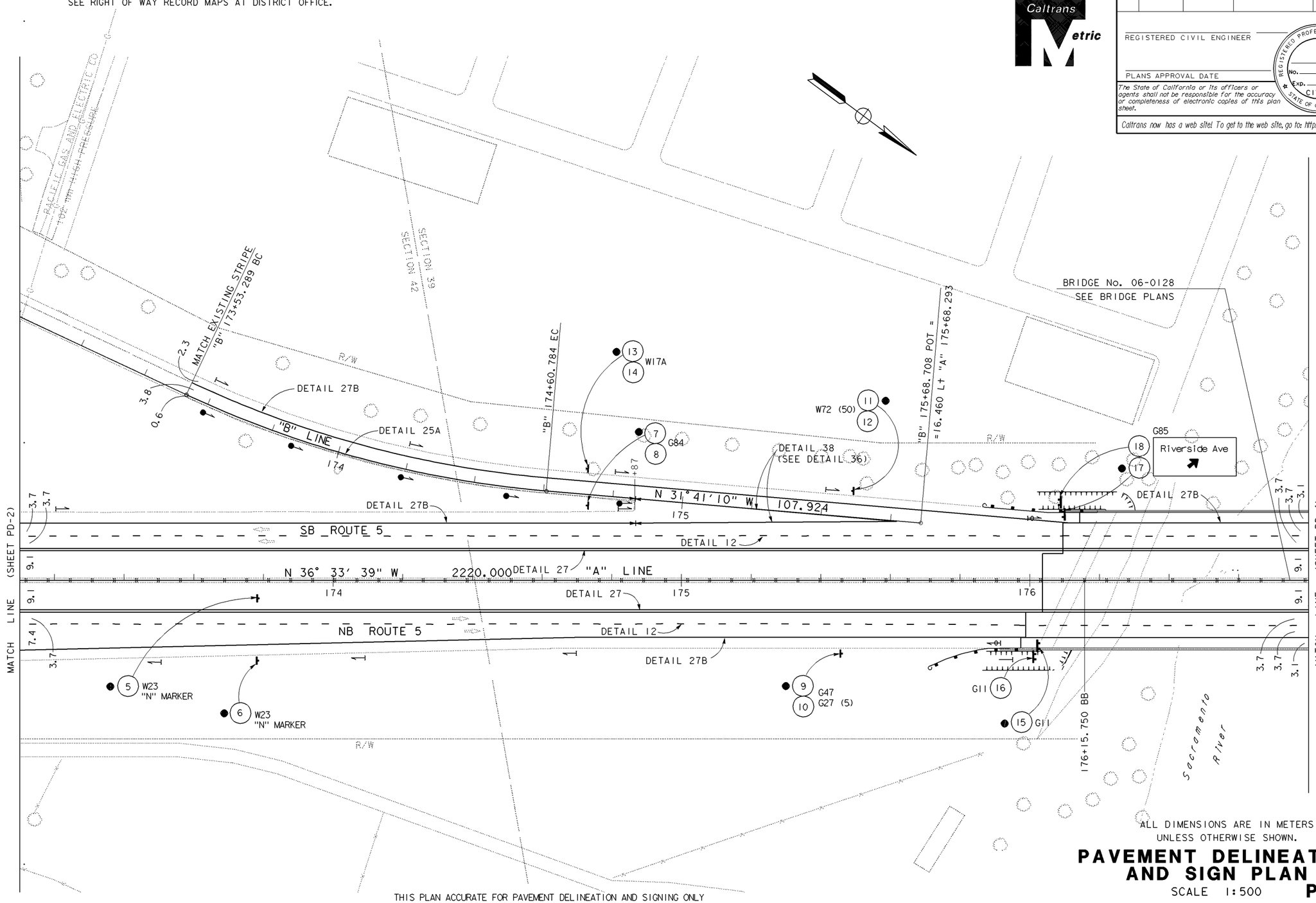

ALL DIMENSIONS ARE IN METERS UNLESS OTHERWISE SHOWN.

THIS PLAN ACCURATE FOR PAVEMENT DELINEATION AND SIGNING ONLY

PAVEMENT DELINEATION AND SIGN PLAN

SCALE 1:500

PD-3

DIST	COUNTY	ROUTE	KILOMETER POST TOTAL PROJECT	SHEET No	TOTAL SHEETS

REGISTERED CIVIL ENGINEER

PLANS APPROVAL DATE

REGISTERED PROFESSIONAL ENGINEER No. Exp. CIVIL STATE OF CALIFORNIA

The State of California or its officers or agents shall not be responsible for the accuracy or completeness of electronic copies of this plan sheet.

Caltrans now has a web site! To get to the web site, go to: http://www.dot.ca.gov

Caltrans Metric

DATE	REVISED BY
RER	DATE REVISED

CALCULATED/DESIGNED BY

CHECKED BY

PROJECT ENGINEER

STATE OF CALIFORNIA - DEPARTMENT OF TRANSPORTATION

Caltrans DESIGN

LAST REVISION 04-02-01

DATE PLOTTED => 10-APR-2001
TIME PLOTTED => 09:07

FOR REDUCED PLANS ORIGINAL SCALE IS IN MILLIMETERS 0 20 40 60 80

USERNAME => trmikesl
DGN FILE => dpm2_161.dgn

CU 00000 EA 000000

Return to Section 2 Table of Contents

NOTE: FOR COMPLETE RIGHT OF WAY AND ACCURATE ACCESS DATA, SEE RIGHT OF WAY RECORD MAPS AT DISTRICT OFFICE.

DIST	COUNTY	ROUTE	KILOMETER POST TOTAL PROJECT	SHEET No	TOTAL SHEETS

REGISTERED CIVIL ENGINEER

PLANS APPROVAL DATE

REGISTERED PROFESSIONAL ENGINEER No. Exp. CIVIL STATE OF CALIFORNIA

The State of California or its officers or agents shall not be responsible for the accuracy or completeness of electronic copies of this plan sheet.

Caltrans now has a web site! To get to the web site, go to: http://www.dot.ca.gov

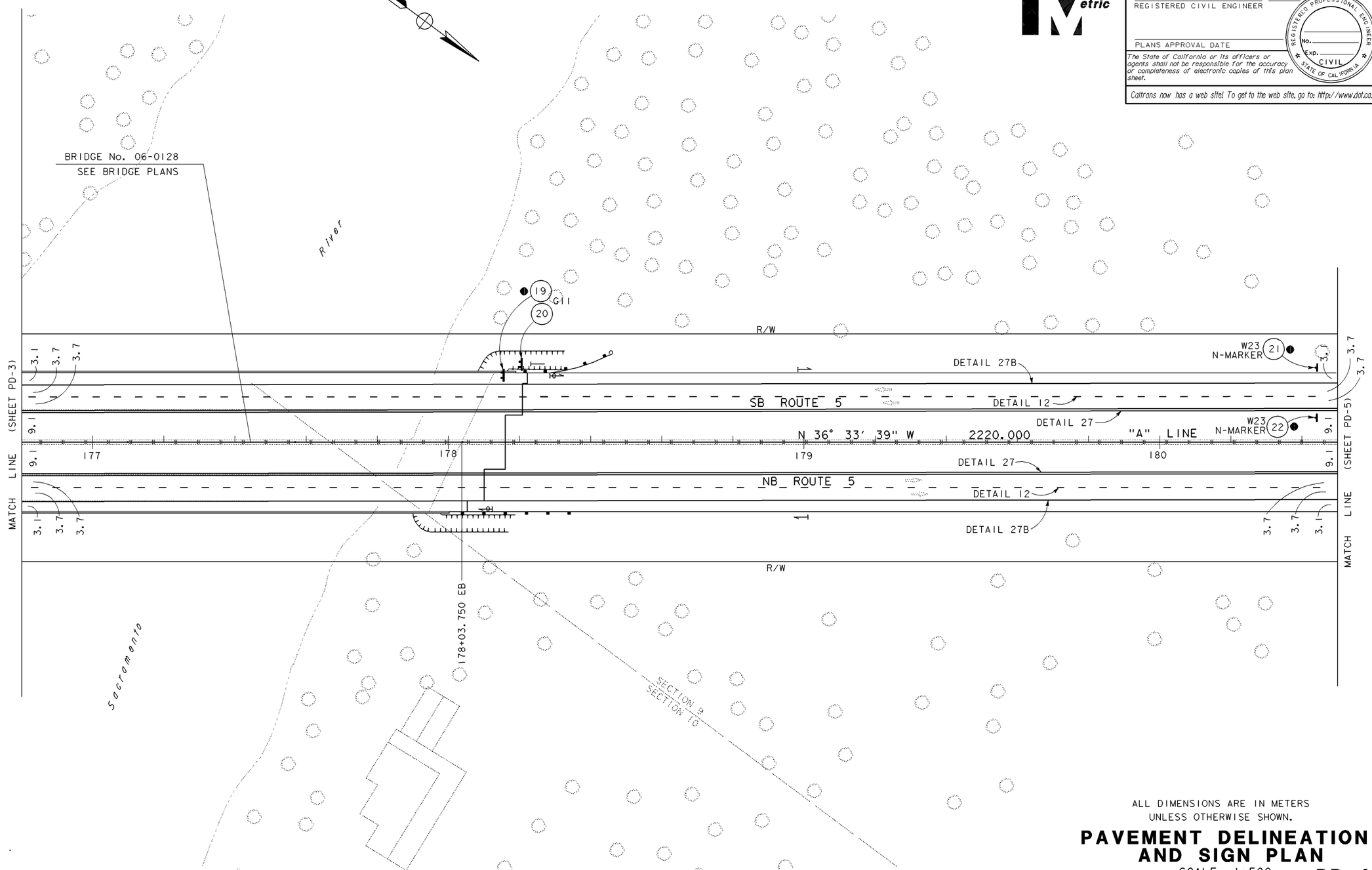

ALL DIMENSIONS ARE IN METERS UNLESS OTHERWISE SHOWN.

THIS PLAN ACCURATE FOR PAVEMENT DELINEATION AND SIGNING ONLY

PAVEMENT DELINEATION AND SIGN PLAN

SCALE 1:500

PD-4

CALCULATED/ DESIGNED BY	RER	REVISED BY	DATE
CHECKED BY			DATE REVISED

PROJECT ENGINEER

STATE OF CALIFORNIA - DEPARTMENT OF TRANSPORTATION

DESIGN

LAST REVISION 04-02-01 | DATE PLOTTED => 10-APR-2001 | TIME PLOTTED => 09:07

FOR REDUCED PLANS ORIGINAL SCALE IS IN MILLIMETERS 0 20 40 60 80

USERNAME => trmikesl
DGN FILE => dpm2_162.dgn

CU 00000 | EA 000000

Return to Section 2 Table of Contents

NOTE: FOR COMPLETE RIGHT OF WAY AND ACCURATE ACCESS DATA, SEE RIGHT OF WAY RECORD MAPS AT DISTRICT OFFICE.

DIST	COUNTY	ROUTE	KILOMETER POST TOTAL PROJECT	SHEET No	TOTAL SHEETS

REGISTERED CIVIL ENGINEER

PLANS APPROVAL DATE

REGISTERED PROFESSIONAL ENGINEER No. Exp. CIVIL STATE OF CALIFORNIA

The State of California or its officers or agents shall not be responsible for the accuracy or completeness of electronic copies of this plan sheet.

Caltrans now has a web site! To get to the web site, go to: http://www.dot.ca.gov

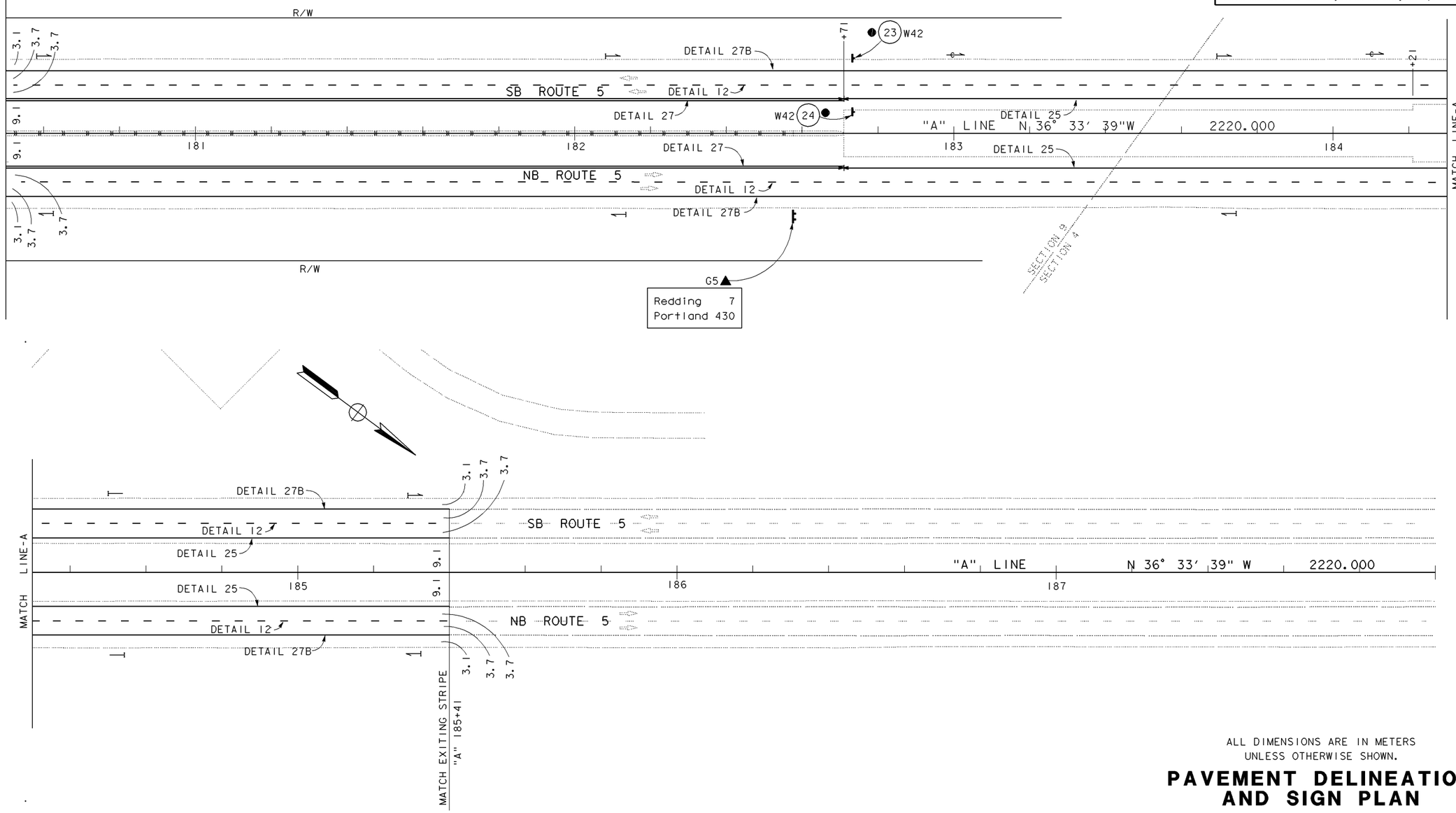

ALL DIMENSIONS ARE IN METERS UNLESS OTHERWISE SHOWN.

THIS PLAN ACCURATE FOR PAVEMENT DELINEATION AND SIGNING ONLY

PAVEMENT DELINEATION AND SIGN PLAN

SCALE 1:500 **PD-5**

STATE OF CALIFORNIA - DEPARTMENT OF TRANSPORTATION

Caltrans **DESIGN**

PROJECT ENGINEER

CALCULATED/DESIGNED BY | RER | DATE | REVISED BY | DATE REVISED

CHECKED BY

LAST REVISION 04-02-01 | DATE PLOTTED => 10-APR-2001 | TIME PLOTTED => 09:07

FOR REDUCED PLANS ORIGINAL SCALE IS IN MILLIMETERS 0 20 40 60 80

USERNAME => trmikesl
DGN FILE => dpm2_163.dgn

CU 00000 | EA 000000

Return to Section 2 Table of Contents

DIST	COUNTY	ROUTE	KILOMETER POST TOTAL PROJECT	SHEET No	TOTAL SHEETS

REGISTERED CIVIL ENGINEER

PLANS APPROVAL DATE

REGISTERED PROFESSIONAL ENGINEER No. Exp. CIVIL STATE OF CALIFORNIA

The State of California or its officers or agents shall not be responsible for the accuracy or completeness of electronic copies of this plan sheet.

Caltrans now has a web site! To get to the web site, go to: http://www.dot.ca.gov

Caltrans Metric

ROADSIDE SIGNS

No.	STATION	LOCATION	SIGN CODE	PANEL SIZE mm	POST SIZE & LENGTH (METERS) 89 x 140 mm	140 x 140 mm	LAMINATED WOOD BOX mm	ROADSIDE SIGN ONE POST EA	TWO POST EA	INSTALL ROADSIDE SIGN (LAMINATED WOOD BOX POST) EA	REMOVE ROADSIDE SIGN EA
1.	"A" 171+23	N/B RIGHT	W59	1219 x 1219				1			
2.	"A" 171+44	N/B RIGHT	W59	1219 x 1219							1
3.	"A" 171+80	N/B MEDIAN	W42	1219 x 1219							1
4.	"A" 172+14	N/B RIGHT	W42	1219 x 1219							1
5.	"A" 173+78	N/B MEDIAN	W23 "N" MARKER	1219 x 1219 457 x 457							1
6.	"A" 173+78	N/B RIGHT	W23 "N" MARKER	1219 x 1219 457 x 457							1
7.	"A" 174+73	S/B RIGHT	G84	1372 x 1219							1
8.	"A" 174+73	S/B RIGHT	G84	1372 x 1219		4.9		1			
9.	"A" 175+46	N/B RIGHT	G47 G27 (5)	610 x 305 914 x 914							1
10.	"A" 175+46	N/B RIGHT	G47 G27 (5)	610 x 305 914 x 914	4.9			1			
11.	"A" 175+49	S/B RIGHT OFF RAMP	W72 (50)	1219 x 1524							1
12.	"A" 175+49	S/B RIGHT OFF RAMP	W72 (50)	1219 x 1524		5.5		1			
13.	"B" 174=70	OFF RAMP RIGHT	W17A	1219 x 1219							1
14.	"B" 174=70	OFF RAMP RIGHT	W17A	1219 x 1219		4.9		1			
15.	"A" 175+98	N/B RIGHT	G11	2286 x 914							1
16.	"A" 175+98	N/B RIGHT	G11	2286 x 914	4.9/ 4.9				1		
17.	"A" 176+10	S/B RIGHT	G85	8738 x 1981							1
18.	"A" 176+10	S/B RIGHT	G85	8738 x 1981			6.7/6.7			1	
19.	"A" 178+15	S/B RIGHT	G11	2286 x 914							1
20.	"A" 178+15	S/B RIGHT	G11	2286 x 914	4.9/ 4.9				1		
21.	"A" 180+44	S/B RIGHT	W23 "N" MARKER	1219 x 1219 457 x 457							1
22.	"A" 180+44	S/B MEDIAN	W23 "N" MARKER	1219 x 1219 457 x 457							1
23.	"A" 182+73	S/B RIGHT	W42	1219 x 1219							1
24.	"A" 182+73	S/B MEDIAN	W42	1219 x 1219							1
TOTALS								5	2	1	16

THERMOPLASTIC TRAFFIC STRIPE (SPRAYABLE)

Sta TO Sta	DIRECTION	DETAIL 8	DETAIL 12	DETAIL 14A	DETAIL 25	DETAIL 25A	DETAIL 27	DETAIL 27B	DETAIL 38
"A" 170+20 TO "A" 185+41	NORTHBOUND	70 m	1521 m		540 m		980 m	1445 m	56 m
"A" 170+20 TO "A" 185+41	SOUTHBOUND		1471 m	50 m	540 m		980 m	3181 m	76 m
"B" 173+53 TO "B" 175+60	S/B OFF RAMP					134 m		215 m	75 m
TOTALS		70 m	2992 m	50 m	1080 m	134 m	1960 m	1521 m	207 m
COMBINED TOTAL		9674 m							

PAVEMENT MARKER (RETROREFLECTIVE)

Sta TO Sta	DIRECTION	PAVEMENT MARKERS (RETROREFLECTIVE) DETAIL NUMBERS	TYPE "C" EA	TYPE "G" EA	TYPE "H" EA
"A" 170+20 TO "A" 185+41	NORTHBOUND	12,25,27,38		110	106
"A" 170+20 TO "A" 185+41	SOUTHBOUND	12,14A,25,27,38	5	110	106
"B" 173+53 TO "B" 175+60	S/B OFF RAMP	25A,38		11	19
TOTALS			5	231	231
COMBINED TOTAL			467 EA*		

*FOR TOTAL QUANTITY SEE STAGE CONSTRUCTION PAVEMENT DELINEATION TABLE ON SUMMARY OF QUANTITIES SHEET

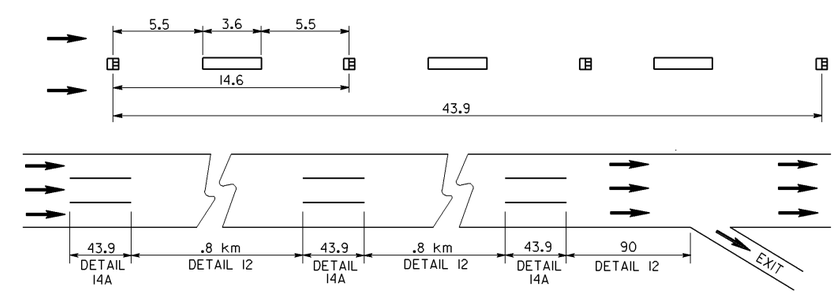

DETAIL 14A

LEGEND

100 mm WHITE STRIPE

TYPE C PAVEMENT MARKER (RED-CLEAR REFLECTIVE)

PAVEMENT DELINEATION AND SIGN DETAILS AND QUANTITIES

NO SCALE

PD-6

STATE OF CALIFORNIA - DEPARTMENT OF TRANSPORTATION

Caltrans DESIGN

PROJECT ENGINEER

CALCULATED/DESIGNED BY RER CHECKED BY

DATE REVISED BY DATE REVISED

LAST REVISION 04-02-01 DATE PLOTTED => 10-APR-2001 TIME PLOTTED => 09:07

FOR REDUCED PLANS ORIGINAL SCALE IS IN MILLIMETERS 0 20 40 60 80

USERNAME => trmikesl DGN FILE => dpm2_164.dgn

CU 00000 EA 000000

Return to Section 2 Table of Contents

2-2.18 Summary of Quantities

Quantity summaries shall be included in the project plans to aid in determining the location and quantities for pay items which are located throughout the plans. Quantities must be calculated for items such as miscellaneous concrete construction (curbs, sidewalks and so on), dikes, guard railing, and fencing.

Drainage quantities shall be included on the Drainage Quantities Sheet (See Section 2-2.11).

Quantity summaries shall be in tabular format. Entries within the table shall be referenced to a line and station for easy location on the plans. Summary headings shall match description for the pay item shown in the Engineer's Estimate.

When final pay items are included in the summary of quantities, the final pay quantities are to be designated on the Engineer's Estimate using (F) or (S-F) as appropriate for the item involved. Do not identify final pay items on the plans.

Items of work shown on the summary of quantities sheet which are not a separate pay item, but are included in other items of work, should be indicated with the symbol "(N)" in the column heading for such items and by adding the following note to the sheet:

(N) = Not a separate pay item, for information only.

Earthwork quantities are normally to be shown on the Full Profile Sheet or the profile portion of the plan (layout) sheet. If earthwork quantities are not shown on the profiles, they shall be summarized on the summary of quantities sheet. Regardless of where the earthwork quantities are summarized on the plans, the total amount of roadway excavation and embankment shall be shown.

The tables for place asphalt concrete (miscellaneous areas) should include areas which cannot be placed with an asphalt concrete spreader such as asphalt concrete overside drains, asphalt concrete aprons, asphalt concrete walkways, pipe downdrain flares, and island paving.

Tables for minor concrete (miscellaneous construction) should include curb, valley gutters, driveways, gutter depressions, and sidewalks.

When tables summarize quantities from other plan sections [for example, Place Asphalt Concrete (Miscellaneous Area) from drainage quantities] describe their origin by note. (Example: "From Drainage Quantities").

If the quantity shown on the summary does not include all the quantity for an item, describe where the additional information can be found. (Example: Note: See Structures plans for additional concrete barrier quantities.)

A quantity table for a specific pay item should include detailed information on the location of the work to be performed. Do not simply repeat the item by item listing shown in the Engineer's Estimate as the summary of quantities.

Use the same amount of decimal places on the plan and the quantity summaries (same degree of accuracy). Do not use commas to group digits, use a space.

DIST	COUNTY	ROUTE	KILOMETER POST TOTAL PROJECT	SHEET No	TOTAL SHEETS

REGISTERED CIVIL ENGINEER

PLANS APPROVAL DATE

REGISTERED PROFESSIONAL ENGINEER No. Exp. CIVIL STATE OF CALIFORNIA

The State of California or its officers or agents shall not be responsible for the accuracy or completeness of electronic copies of this plan sheet.

Caltrans now has a web site! To get to the web site, go to: http://www.dot.ca.gov

Caltrans Metric

COLD PLANE AC PAVEMENT

STATION	Loc	25 mm Max	40 mm Max	45 mm Max	70 mm Max
		m^2			
MI3 88+25 TO 89+31	R†	257			
MI5 87+02 TO 88+15	L†	276			
B3 92+74 TO 92+89	R†			223	
B3 92+78 TO 92+87	L†			73	
MC2 97+90 TO 98+76	R†	190			
B3 99+29 TO 99+44	R†			120	
MC2 99+52 TO 100+13	R†			167	
PAVEMENT TRANSITION #1					
B3 83+82 TO 83+97	R†				237
B3 83+97 TO 84+12	L†				218
B4 110+18 TO 110+34	L† & R†				436
CMI7 86+87 TO 87+02	EB OFF RAMP				111
MC1 97+38 TO 97+54	EB OFF RAMP				176
MI4 89+61 TO 97+54	WB OFF RAMP				111
FL7 100+28 TO 100+43	WB OFF RAMP				111
PAVEMENT TRANSITION #2					
MI5 87+05 TO 87+13	EB ON RAMP	74			
MC2 97+63 TO 97+70	EB ON RAMP	65			
FD7 89+29 TO 89+31	WB ON RAMP	89			
MI3 89+23 TO 89+31	WB ON RAMP	65			
PAVEMENT TRANSITION #3					
B4 103+20 TO 103+35	L† & R†		242		
B4 105+12 TO 105+27	L† & R†		242		
TOTAL		1016	484	583	1400

CONCRETE BARRIER

STATION	Loc	REMOVE (TYPE 50)	TYPE 60	TYPE 60C	TYPE 60E
		m	m	m	m
B3 83+97.0 TO 86+23.5	℄			226.5	
B3 86+23.5 TO 86+76.5	℄				53.0
B3 86+76.5 TO 89+76.9	℄			300.4	
B3 89+76.9 TO 92+27.0	℄		250.1		
B3 92+27.0 TO 93+79.0	℄			152.0	
B3 93+79.0 TO 94+27.3	℄				48.3
B3 94+27.3 TO 96+93.3	℄		266.0		
B4 96+93.3 TO 99+62.0	℄			268.7	
B4 99+62.0 TO 100+07.0	℄				45.0
B4 100+07.0 TO 101+42.0	℄			135.0	
B4 101+42.0 TO 103+44.1	℄		202.1		
B4 103+44.1 TO 105+03.2	(SEE STRUCTURE PLANS FOR THIS SECTION)				
B4 105+03.2 TO 108+97.2	℄	394.0	394.0		
B4 108+97.2 TO 110+34.0	℄	136.8		136.8	
TOTAL		530.8	1112.2	1219.4	146.3

ROADWAY QUANTITIES

STATION	ASPHALT CONCRETE (OPEN GRADED)	ASPHALT CONCRETE (TYPE A)	ASPHALTIC EMULSION (PAINT BINDER)	CLASS 3 AGGREGATE BASE	CLASS 4 AGGREGATE SUBBASE	PORTLAND CEMENT CONCRETE BASE	ROADWAY EXCAVATION	(N) EMBANKMENT
	tonne	tonne	tonne	m^3	m^3	m^3	m^3	m^3
B3 83+82 TO B4 110+34	7921	33 010	82.1	10 982	12 815		24 155	442
MI3 85+59 TO 89+31	357	892	1.8	466	518		1 443	51
MI5 87+05 TO 90+96	286	770	1.5	301	335		573	34
FD7 95+14 TO 98+51	287	985	1.5	541	600		1 355	157
MC2 97+90 TO 101+71	288	893	1.5	425	472	3.7	728	155
TOTAL	9139	36 550	88.4	12 715	14 740	3.7	28 253	834

(N) - NOT A SEPARATE PAY ITEM, FOR INFORMATION ONLY.

MINOR CONCRETE (MISCELLANEOUS CONSTRUCTION)

STATION	LOCATION	GUTTER DEPRESSIONS	B4 CURB
		m^3	m^3
FD7 96+56.2 TO 97+00.0	R†		6.3
B3 96+56.2 TO 96+86.2	L†		4.4
SUBTOTAL			10.7
FROM DRAINAGE PLANS		20.1	
TOTAL		30.8	

REMOVE CONCRETE

STATION	LOCATION	CURB	ISLAND
		m^3	m^3
FD7 96+05.0 TO 97+96.0	L†	17.7	
FD7 96+56.2 TO 97+00.0	R†	30.2	
B3 96+56.2 TO 96+86.2	L†	4.6	7.0
MI3 88+44.0 TO 89+16.0	R†	11.0	
MC2 97+90.0 TO 99+52.0	R†		
SUBTOTAL		63.5	7.0
TOTAL		70.5	

PLACE AC (MISCELLANEOUS AREA)

LOCATION	m^2
B3 83+78 TO 83+97	201.0
B3 96+56 TO 96+86	69.3
TOTAL	270.3

FENCE

STATION	LOCATION	REMOVE CHAIN LINK FENCE (TYPE CL-1.8)	RECONSTRUCT CHAIN LINK FENCE (TYPE CL-1.8)
		m	m
LOL SW80 86+49.2 TO 88+67.3	R†	218.1	
LOL SW80 88+67.3 TO 88+70.3	R†		3.0
LOL SW80 82+83.0 TO 82+86.1	R†		3.1
TOTAL		218.1	6.1

SUMMARY OF QUANTITIES SHEET, EXAMPLE "A"

SUMMARY OF QUANTITIES

Q-1

STATE OF CALIFORNIA - DEPARTMENT OF TRANSPORTATION

Caltrans PROJECT DEVELOPMENT

PROJECT ENGINEER

CALCULATED/DESIGNED BY

CHECKED BY

DATE REVISED BY

DATE REVISED

LAST REVISION 04-04-01

DATE PLOTTED => 10-APR-2001
TIME PLOTTED => 09:07

FOR REDUCED PLANS ORIGINAL SCALE IS IN MILLIMETERS 0 20 40 60 80

USERNAME => trmikesl
DGN FILE => dpm2_167.dgn

CU 00000 EA 000000

Return to Section 2 Table of Contents

DIST	COUNTY	ROUTE	KILOMETER POST TOTAL PROJECT	SHEET No	TOTAL SHEETS

REGISTERED CIVIL ENGINEER

PLANS APPROVAL DATE

REGISTERED PROFESSIONAL ENGINEER No. Exp. CIVIL STATE OF CALIFORNIA

The State of California or its officers or agents shall not be responsible for the accuracy or completeness of electronic copies of this plan sheet.

Caltrans now has a web site! To get to the web site, go to: http://www.dot.ca.gov

Caltrans Metric

METAL BEAM GUARD RAILING

STATION TO STATION	WORK AREA DESCRIPTION	NEW MBGR OR RECONSTRUCT MBGR	EXISTING MBGR (TO BE REMOVED AND RECONSTRUCTED)	TERMINAL SYSTEM (TYPE SRT)	TERMINAL ANCHOR ASSEMBLY (TYPE SFT)	TERMINAL SYSTEM (TYPE ET)	(N) BURIED POST ANCHOR	(N) MBGR CONNECTION TO BRIDGE RAILS, RETAINING WALLS AND ABUTMENTS	(N) REMOVE TERMINAL SECTION	(N) REMOVE CAA	(N) REMOVE BURIED POST ANCHOR	(N) GUARD RAILING LAYOUT
		m	m	EA	EA	EA	EA	EA	EA	EA	EA	TYPE
19+26 to 19+40	ROUTE 108 R+		19.05	1					1	1		1B
21+60 to 21+74	ROUTE 108 R+		15.24			1			1	1		1B
13+06 to 13+25	RAMP A R+	7.62		1				1				1A
3+07 to 3+25	RAMP D L+	7.62	11.43	1				1	1	1		1A
9+55 to 10+85	MONO WAY R+		144.78						2	2		
23+07 to 23+26	ROUTE 108 R+		19.05						1	1		
23+82 to 24+03	ROUTE 108 R+	7.62	19.05	1				1	1	1		1A
3+82 to 4+03	RAMP D L+	7.62	19.05	1				1	1	1		1A
13+09 to 15+84	RAMP A L+	198.12			1			1				
13+09 to 15+84	RAMP A R+	205.74			1			1				
31+30 to 32+60	SANGUINETTI Rd R+	110.49	41.9	2					2	2		1B
25+00 to 26+00	ROUTE 108 L+	91.44		1				1				1A
26+00 to 26+20	ROUTE 108 R+	7.62		1				1				1A
7+10 to 8+40	RAMP C L+	125.70		1	1							1B
27+09 to 30+50	ROUTE 108 L+	331.50		1				1				1A
27+25 to 27+45	ROUTE 108 R+	7.62		1				1				1A
7+90 to 9+20	RAMP B L+	118.11		1	1				1	1		1B
35+20 to 35+73	SANGUINETTI Rd R+	41.94	53.37	1	1				1	1		1B
35+73 to 38+05	SANGUINETTI Rd R+		205.66									
28+00 to 28+35	ROUTE 108 R+	7.62		2								1B
35+25 to 35+42	ROUTE 108 L+	7.62		1				1				1A
35+25 to 35+42	ROUTE 108 R+	7.62		1				1				1A
38+52 to 38+71	ROUTE 108 L+	7.62		1				1				1A
38+52 to 38+71	ROUTE 108 R+	7.62		1				1				1A
45+60 to 45+77	ROUTE 108 L+	7.62		1				1				1A
45+60 to 45+77	ROUTE 108 R+	7.62		1				1				1A
46+40 to 46+55	ROUTE 108 L+	7.62		1				1				1A
46+40 to 46+55	ROUTE 108 R+	7.62		1				1				1A
18+00 to 20+30	BERGEL/PHOENIX LAKE L+	240.00		1	1							1B
20+35 to 20+88	PHOENIX LAKE Rd L+	45.72		1	1							1B
19+05 to 19+45	PHOENIX LAKE Rd R+	38.10		2								1B
25+25 to 25+65	ROUTE 108 R+		38.10							2		
97+20 to 97+31	MONO WAY L+		11.43	1					1	1		1B
97+20 to 97+31	MONO WAY R+		11.43	1					1	1		1B
	SUBTOTAL	1661.16	609.54	30	7	1						

(N) - NOT A SEPARATE PAY ITEM, FOR INFORMATION ONLY.

See Sheet Q-7 regarding the format used in this summary.

SUMMARY OF QUANTITIES

SUMMARY OF QUANTITIES SHEET, EXAMPLE "B"

Q-6

STATE OF CALIFORNIA - DEPARTMENT OF TRANSPORTATION

Caltrans PROJECT DEVELOPMENT

PROJECT ENGINEER

CALCULATED/DESIGNED BY

CHECKED BY

REVISED BY

DATE REVISED

DATE

LAST REVISION 04-02-01

DATE PLOTTED => 10-APR-2001
TIME PLOTTED => 09:07

FOR REDUCED PLANS ORIGINAL SCALE IS IN MILLIMETERS 0 20 40 60 80

USERNAME => trmikesi
DGN FILE => dpm2_168.dgn

CU 00000

EA 000000

Return to Section 2 Table of Contents

DIST	COUNTY	ROUTE	KILOMETER POST TOTAL PROJECT	SHEET No	TOTAL SHEETS

REGISTERED CIVIL ENGINEER

PLANS APPROVAL DATE

REGISTERED PROFESSIONAL ENGINEER NO. EXP. CIVIL STATE OF CALIFORNIA

The State of California or its officers or agents shall not be responsible for the accuracy or completeness of electronic copies of this plan sheet.

Caltrans now has a web site! To get to the web site, go to: http://www.dot.ca.gov

METAL BEAM GUARD RAILING

STATION TO STATION	WORK AREA DESCRIPTION	NEW MBGR OR RECONSTRUCT MBGR	EXISTING MBGR (TO BE REMOVED AND RECONSTRUCTED)	TERMINAL SYSTEM (TYPE SRT)	TERMINAL ANCHOR ASSEMBLY (TYPE SFT)	TERMINAL SYSTEM (TYPE ET)	(N) BURIED POST ANCHOR	(N) MBGR CONNECTION TO BRIDGE RAILS, RETAINING WALLS AND ABUTMENTS	(N) REMOVE TERMINAL SECTION	(N) REMOVE CAA	(N) REMOVE BURIED POST ANCHOR	(N) GUARD RAILING LAYOUT
		m	m	EA	EA	EA	EA	EA	EA	EA	EA	TYPE
97+84 to 98+14	MONO WAY Lt	30.50	30.50				1				1	2B
97+98 to 98+09	MONO WAY Rt		11.43	1					1	1		2B
116+57 to 116+72	MONO WAY Lt	15.24					1	1	1	1		2A
117+14 to 117+30	MONO WAY Lt	15.24	19.05				1	1				2A
7+45 to 53+92	RAMP G/ROUTE 108 Lt	636.30		1	1							1B
7+50 to 7+80	RAMP F Rt	38.10		1	1							1B
21+45 to 23+45	PHOENIX LAKE Rd Rt	186.70		2								1B
49+00 to 50+15	ROUTE 108 Lt	95.25		2								1B
40+50 to 40+75	SOMMETTE Dr Rt	19.05		1	1							1B
46+20 to 47+40	WAIF MINE Rd Rt	99.06		2								1B
12+55 to 13+60	Temp Conn Rt	83.88		2								1B
40+80 to 42+00	SOMMETTE Dr Rt	118.11		1	1							1B
111+73 to 112+19	MONO WAY Lt	22.90		2								1B
111+73 to 112+19	MONO WAY Rt	22.90		2								1B
199+10 to 199+23	HESS Ave Lt		15.24									
199+46 to 199+76	HESS Ave Lt		30.50									
	SUBTOTAL	1383.23	106.72	17	4							
	TOTAL	3044.39	716.26	47	11	1						
	TOTAL RECONSTRUCT MBGR	716.26										
	TOTAL NEW MBGR	2328.13										

(N) - NOT A SEPARATE PAY ITEM, FOR INFORMATION ONLY.

The format used in this summary allows the contractor to use new materials to construct guard railing at each installation shown or reuse removed materials to reconstruct guard railing at these locations. This give the contractor greater flexibility in scheduling his construction operations.

Guard railing to be removed and reused in the reconstruction of the guard railing and guard railing required for construction at each installation shall be designated on the plan sheets in a manner similar to the wording in the headings of this example summary of quantities. This may be accomplished by using a designation such as (R/RC) and (N/RCD) to identify the work to be performed on the plan sheets and define the designation on the first sheet of the plans showing guard railing work e.g.,

(R/RC) = Remove existing metal beam guard railing and reconstruct at new or existing locations. See Summary of Quantities sheet.

(N/RCD) = New metal beam guard railing or reconstructed metal beam guard railing. See Summary of Quantities sheet.

If more guard railing is to be removed that can be reused on a project (this is not the case shown in this example summary) and the excess railing is to be salvaged, the designation (R/S) could be used on the plan sheets to identify the removal of existing guard railing and reuse in the reconstruction work or salvaging of railing if not required for reconstruction work. The definition used on the first sheet of the plans showing guard railing work would be:

(R/S) = Remove existing metal beam guard railing and reconstructed at new or existing locations or salvage existing metal beam guard railing not required for reconstruction work. See Summary of Quantities sheet.

If more guard railing is to be removed than is required for reconstruction work and no new guard railing is to be constructed, the equivalent headings for quantity summary would be "Reconstruct Metal Beam Guard Railing" and "Existing Metal Beam Guard Railing (To be removed or salvaged)". The total quantitiy of Salvage Metal Beam Guard Railing is to be shown on the summary of quantities for metal beam guard railing and would be the total quantity of removal of metal beam guard railing minus the quantity for reconstruct metal beam guard railing.

SUMMARY OF QUANTITIES SHEET, EXAMPLE "C"

SUMMARY OF QUANTITIES

Q-7

STATE OF CALIFORNIA - DEPARTMENT OF TRANSPORTATION

Caltrans PROJECT DEVELOPMENT

PROJECT ENGINEER

CALCULATED/DESIGNED BY

CHECKED BY

DATE REVISED BY

DATE REVISED

LAST REVISION 04-02-01

DATE PLOTTED => 10-APR-2001

TIME PLOTTED => 09:07

FOR REDUCED PLANS ORIGINAL SCALE IS IN MILLIMETERS 0 20 40 60 80

USERNAME => trmikesl

DGN FILE => dpm2_169.dgn

CU 00000

EA 000000

Return to Section 2 Table of Contents

METAL BEAM GUARD RAILING

LOCATION	DIRECTION	LAYOUT TYPE	METAL BEAM GUARD RAILING (WOOD POST)	TERMINAL SYSTEM (TYPE SRT)	TERMINAL ANCHOR ASSEMBLY (TYPE SFT)	(N) REMOVE CABLE ANCHOR ASSEMBY	(N) REMOVE TERMINAL ANCHOR ASSEMBLY	REMOVE METAL BEAM GUARD RAILING	(N) BURIED POST ANCHOR	CRASH CUSHION (TYPE CAT)	CRASH CUSHION (TYPE CAT) BACKUP	(N) REMOVE TERMINAL SECTION	SINGLE THRIE BEAM BARRIER (WOOD POST)	DOUBLE THRIE BEAM BARRIER (WOOD POST)	DESCRIPTION
			m	EA	EA	EA	EA	m	EA	EA	EA	EA	m	m	
"A" 172+00	SB	2B	36		1				1						MAINTENANCE PULLOUT
STAGE 1A															
"A" 175+72	NB					1		32				1			LEFT SIDE
"A" 178+11	SB					1		32				1			LEFT SIDE
STAGE 2															
"A" 175+66	NB		7.6	1		1		32				1			RIGHT SIDE
"A" 178+11	NB		7.6		1										RIGHT SIDE
STAGE 3B															
"A" 175+72			7.6		1							1			RIGHT SIDE
"A" 178+11	SB		7.6	1		1		32							RIGHT SIDE
STAGE 4															
"A" 172+05	MED									1	1				MEDIAN
"A" 172+17	MED						2	55.3					61		BRIDGE COLUMN
"A" 172+47 - 176+15	MED													368	MEDIAN
"A" 176+15 - 178+04	MED														BRIDGE
"A" 178+04 - 182+58	MED													453.66	MEDIAN
"A" 182+60	MED									1	1				MEDIAN
TOTAL			66.4	2	3	4	2	183.3	1	2	2	4	61	821.66	

(N) - NOT A SEPARATE PAY ITEM, FOR INFORMATION ONLY.

ASPHALT CONCRETE DIKE

LOCATION	DIRECTION	LOCATION	REMOVE AC DIKE	PLACE ASPHALT CONCRETE DIKE			ASPHALT CONCRETE (TYPE A)
				TYPE C	TYPE F	TYPE E	
	NB/SB	Rt/Lt	m	m	m	m	tonne
STAGE 3A							
"B" 172+60.00 - "A" 173+53.28	RAMP	LT	93.28				
STAGE 4							
"B" 172+60.00 - "A" 175+83.11	RAMP	LT				323.11	20.71
"A" 178+53.89 - "A" 182+71.00	SB	LT				417.11	26.73
"A" 172+90.00 - "A" 175+65.91	NB	RT				275.91	17.68
"A" 178+36.89 - "A" 182+71.00	NB	RT				434.11	27.82
"A" 175+83.11 - "A" 176+07.38	SB	LT		24.27			0.52
"A" 178+29.62 - "A" 178+53.89	SB	LT		24.27			0.52
"A" 175+65.91 - "A" 175+90.18	NB	RT		24.27			0.52
"A" 178+12.62 - "A" 178+36.89	NB	RT		24.27			0.52
"A" 176+07.38 - "A" 176+15.00	SB	LT			7.6		0.29
"A" 178+22.00 - "A" 178+29.62	SB	LT			7.6		0.29
"A" 175+90.18 - "A" 175+97.80	NB	RT			7.6		0.29
"A" 178+05.00 - "A" 178+12.62	NB	RT			7.6		0.29
TOTAL			93.28	97.08	30.4	1450.2	96.2*

*SEE ROADWAY ITEMS TABLE FOR TOTAL AC QUANTITY.

SUMMARY OF QUANTITIES SHEET, EXAMPLE "D-1"

SUMMARY OF QUANTITIES
Q-1

DIST	COUNTY	ROUTE	KILOMETER POST TOTAL PROJECT	SHEET No	TOTAL SHEETS

REGISTERED CIVIL ENGINEER

PLANS APPROVAL DATE

REGISTERED PROFESSIONAL ENGINEER No. Exp. CIVIL STATE OF CALIFORNIA

The State of California or its officers or agents shall not be responsible for the accuracy or completeness of electronic copies of this plan sheet.

Caltrans now has a web site! To get to the web site, go to: http://www.dot.ca.gov

Caltrans Metric

REVISED BY | DATE REVISED | DATE | CALCULATED/DESIGNED BY | CHECKED BY | PROJECT ENGINEER

STATE OF CALIFORNIA - DEPARTMENT OF TRANSPORTATION
Caltrans DESIGN

10-APR-2001 dpm2_170.dgn 09:07

LAST REVISION 04-04-01 | DATE PLOTTED => 10-APR-2001 | TIME PLOTTED => 09:07

FOR REDUCED PLANS ORIGINAL SCALE IS IN MILLIMETERS 0 20 40 60 80

USERNAME => trmikesl
DGN FILE => dpm2_170.dgn

CU 00000 | EA 000000

Return to Section 2 Table of Contents

DIST	COUNTY	ROUTE	KILOMETER POST TOTAL PROJECT	SHEET No	TOTAL SHEETS

REGISTERED CIVIL ENGINEER

PLANS APPROVAL DATE

REGISTERED PROFESSIONAL ENGINEER No. Exp. CIVIL STATE OF CALIFORNIA

The State of California or its officers or agents shall not be responsible for the accuracy or completeness of electronic copies of this plan sheet.

Caltrans now has a web site! To get to the web site, go to: http://www.dot.ca.gov

Caltrans Metric

STAGE CONSTRUCTION PAVEMENT DELINEATION

SHEET NUMBER	STATION / LOCATION	DIRECTION	DETAIL NUMBER	(N) REMOVE PAVEMENT MARKER	REMOVE THERMOPLASTIC TRAFFIC STRIPE	REMOVE PAINTED TRAFFIC STRIPE		PAVEMENT MARKER (RETRO REFLECTIVE)		CHANNELIZER (SURFACE MOUNTED)	PAINT TRAFFIC STRIPE (2-COAT)				(N) REMOVE CHANNELIZER (SURFACE MOUNTED)	TYPE III BARRICADE	PORTABLE RADAR TRAILER	DESCRIPTION
					100 mm	100 mm	200 mm	TYPE G	TYPE H		100 mm SOLID WHITE	100 mm DASHED WHITE	100 mm SOLID YELLOW	200 mm SOLID WHITE				
				EA	m	m	m	EA	EA	EA	m	m	m	m	EA	EA	EA	
	STAGE 1A																	
SC-1	"A" 170+20 TO "A" 171+40	NB/SB	25	18	240													REMOVE FROM EXISTING
SC-1	"A" 170+20 TO "A" 177+40	NB/SB	12	100		1440												REMOVE FROM EXISTING
SC-1	"A" 170+20 TO "A" 177+40	NB/SB	12					100				1440						
SC-1	"A" 170+20 TO "A" 177+40	NB/SB	25						100				1440					
SC-1	"A" 171+40 TO "A" 177+40	NB/SB	25		1200													REMOVE FROM EXISTING
SC-2	"A" 177+40 TO "A" 184+21	NB/SB	25		1362													REMOVE FROM EXISTING
SC-2	"A" 177+40 TO "A" 185+41	NB/SB	12	112		1602												REMOVE FROM EXISTING
SC-2	"A" 177+40 TO "A" 185+41	NB/SB	12					111			1602							
SC-2	"A" 177+40 TO "A" 185+41	NB/SB	25						111			1602						
SC-2	"A" 184+21 TO "A" 185+41	NB/SB	25	18	240													REMOVE FROM EXISTING
	STAGE 1B																	
SC-3	"A" 170+20 TO "A" 177+40	NB/SB	12	100		1440												
SC-3	"A" 170+20 TO "A" 177+40	NB/SB	25	100		1440												
SC-3	"A" 170+20 TO "A" 177+40	NB/SB	12					100			1440							
SC-3	"A" 170+20 TO "A" 177+40	NB/SB	25						100			1440						
SC-4	"A" 177+40 TO "A" 185+41	NB/SB	12	112		1602												
SC-4	"A" 177+40 TO "A" 185+41	NB/SB	25	112		1602												
SC-4	"A" 177+40 TO "A" 185+41	NB/SB	12					112			1602							
SC-4	"A" 177+40 TO "A" 185+41	NB/SB	25						112			1602						
	STAGE 2																	
SC-5	"A" 172+90 TO "A" 173+73	NB								36					20			NB/RT
SC-5	"A" 172+90 TO "A" 174+30	NB								28								NB/LT
SC-5	"A" 172+90 TO "A" 175+30	NB	27B			240												REMOVE FROM EXISTING
SC-5	"A" 172+90 TO "A" 175+30	NB	12	18		240												
SC-5	"A" 172+90 TO "A" 175+30	NB	25	18		240												
SC-5	"A" 172+90 TO "A" 177+40	NB	27B								450							
SC-5	"A" 172+90 TO "A" 177+40	NB	12					32				450						
SC-5	"A" 172+90 TO "A" 177+40	NB	25						32				450					
SC-6	"A" 177+40 TO "A" 182+71	NB	27B								531							
SC-6	"A" 177+40 TO "A" 182+71	NB	12					38				531						
SC-6	"A" 177+40 TO "A" 182+71	NB	25						38				531					
SC-6	"A" 179+96 TO "A" 182+71	NB	27B			275												
SC-6	"A" 179+96 TO "A" 182+71	NB	12	20		275												
SC-6	"A" 179+96 TO "A" 182+71	NB	25	20		275												
SC-6	"A" 181+40 TO "A" 182+71	NB								55					27			
		SUBTOTAL		748	3042	10 671	0	493	493	119	5625	7065	2421	0	47			
		TOTAL		748	3042	10 671		986		119	15 111				47			

(N) - NOT A separate PAY ITEM, FOR INFORMATION ONLY.

SUMMARY OF QUANTITIES SHEET, EXAMPLE "D-2"

SUMMARY OF QUANTITIES

Q-4

REVISED BY | DATE REVISED | DATE | CALCULATED/DESIGNED BY | CHECKED BY | PROJECT ENGINEER

STATE OF CALIFORNIA - DEPARTMENT OF TRANSPORTATION

DESIGN

Caltrans

09:08 10-APR-2001 dpm2_171.dgn

LAST REVISION 04-02-01 | DATE PLOTTED => 10-APR-2001 TIME PLOTTED => 09:08

FOR REDUCED PLANS ORIGINAL SCALE IS IN MILLIMETERS 0 20 40 60 80

USERNAME => trmikesl
DGN FILE => dpm2_171.dgn

CU 00000 | EA 000000

Return to Section 2 Table of Contents

DIST	COUNTY	ROUTE	KILOMETER POST TOTAL PROJECT	SHEET No	TOTAL SHEETS

REGISTERED CIVIL ENGINEER

PLANS APPROVAL DATE

REGISTERED PROFESSIONAL ENGINEER No. Exp. CIVIL STATE OF CALIFORNIA

The State of California or its officers or agents shall not be responsible for the accuracy or completeness of electronic copies of this plan sheet.

Caltrans now has a web site! To get to the web site, go to: http://www.dot.ca.gov

Caltrans Metric

STAGE CONSTRUCTION PAVEMENT DELINEATION

SHEET NUMBER	STATION / LOCATION	DIRECTION	DETAIL NUMBER	(N) REMOVE PAVEMENT MARKER	REMOVE THERMOPLASTIC TRAFFIC STRIPE	REMOVE PAINTED TRAFFIC STRIPE		PAVEMENT MARKER (RETRO REFLECTIVE)		CHANNELIZER (SURFACE MOUNTED)	PAINT TRAFFIC STRIPE (2-COAT)				(N) REMOVE CHANNELIZER (SURFACE MOUNTED)	TYPE III BARRICADE	PORTABLE RADAR TRAILER	DESCRIPTION
					100 mm	100 mm	200 mm	TYPE G	TYPE H		100 mm SOLID WHITE	100 mm DASHED WHITE	100 mm SOLID YELLOW	200 mm SOLID WHITE				
				EA	m	m	m	EA	EA	EA	m	m	m	m	EA	EA	EA	
	STAGE 3A																	
SC-7	"A" 172+90 TO "A" 173+73	NB													16			NB/RT
SC-7	"A" 172+90 TO "A" 174+25	SB								28								
SC-7	"A" 172+90 TO "A" 174+30	NB													28			NB/LT
SC-7	"A" 172+90 TO "A" 174+60	SB	27B			170												REMOVE FROM EXISTING
SC-7	"A" 172+90 TO "A" 174+60	SB	12	13		170												REMOVE FROM STAGE 1B
SC-7	"A" 172+90 TO "A" 174+60	SB	25	13		170												REMOVE FROM STAGE 1B
SC-7	"A" 172+90 TO "A" 175+60	NB	27B			270												
SC-7	"A" 172+90 TO "A" 175+60	NB	12	20		270												
SC-7	"A" 172+90 TO "A" 175+60	NB	25	20		270												
SC-7	"A" 172+90 TO "A" 175+60	SB	27B								270							
SC-7	"A" 172+90 TO "A" 175+60	SB	12					20				270						
SC-7	"A" 172+90 TO "A" 175+60	SB	25						20				270					
SC-7	"A" 172+90 TO "A" 177+40	NB	27B								450							
SC-7	"A" 172+90 TO "A" 177+40	NB	12					32				450						
SC-7	"A" 172+90 TO "A" 177+40	NB	25						32				450					
SC-8	"A" 179+96 TO "A" 182+71	NB	27B			275												
SC-8	"A" 179+96 TO "A" 182+71	NB	12	20		275												
SC-8	"A" 179+96 TO "A" 182+71	NB	25	20		275												
SC-8	"A" 179+96 TO "A" 182+71	SB	27B								275							
SC-8	"A" 179+96 TO "A" 182+71	SB	12					20				275						
SC-8	"A" 179+96 TO "A" 182+71	SB	25						20				275					
SC-8	"A" 177+40 TO "A" 182+71	NB	27B								531							
SC-8	"A" 177+40 TO "A" 182+71	NB	12					38				531						
SC-8	"A" 177+40 TO "A" 182+71	NB	25						38				531					
SC-8	"A" 178+20 TO "A" 182+71	SB	27B			451												REMOVE FROM EXISTING
SC-8	"A" 178+20 TO "A" 182+71	SB	12	32		451												REMOVE FROM STAGE 1B
SC-8	"A" 178+20 TO "A" 182+71	SB	25	32		451												REMOVE FROM STAGE 1B
SC-8	"A" 181+20 TO "A" 182+71	SB/LT								31								SB/RT
SC-8	"A" 181+40 TO "A" 181+71	NB													28			
SC-8	"A" 182+05 TO "A" 182+71	SB/RT								14								SB/LT
SUBTOTAL				170		3498	0	110	110	73	1526	1526	1526	0	72			
TOTAL				170		3498		220		73	4578				72			

(N) - NOT A SEPARATE PAY ITEM, FOR INFORMATION ONLY.

SUMMARY OF QUANTITIES SHEET, EXAMPLE "D-3"

SUMMARY OF QUANTITIES

Q-5

REVISED BY | DATE | DATE REVISED

CALCULATED/DESIGNED BY | CHECKED BY

PROJECT ENGINEER

STATE OF CALIFORNIA - DEPARTMENT OF TRANSPORTATION

Caltrans DESIGN

10-APR-2001 dpm2_172.dgn 09:08

LAST REVISION 04-02-01 | DATE PLOTTED => 10-APR-2001 TIME PLOTTED => 09:08

FOR REDUCED PLANS ORIGINAL SCALE IS IN MILLIMETERS 0 20 40 60 80

USERNAME => trmikesl DGN FILE => dpm2_172.dgn

CU 00000 | EA 000000

Return to Section 2 Table of Contents

DIST	COUNTY	ROUTE	KILOMETER POST TOTAL PROJECT	SHEET No	TOTAL SHEETS

REGISTERED CIVIL ENGINEER

PLANS APPROVAL DATE

REGISTERED PROFESSIONAL ENGINEER No. Exp. CIVIL STATE OF CALIFORNIA

The State of California or its officers or agents shall not be responsible for the accuracy or completeness of electronic copies of this plan sheet.

Caltrans now has a web site! To get to the web site, go to: http://www.dot.ca.gov

Caltrans Metric

STAGE CONSTRUCTION PAVEMENT DELINEATION

SHEET NUMBER	STATION / LOCATION	DIRECTION	DETAIL NUMBER	(N) REMOVE PAVEMENT MARKER	REMOVE THERMOPLASTIC TRAFFIC STRIPE	REMOVE PAINTED TRAFFIC STRIPE		PAVEMENT MARKER (RETRO REFLECTIVE)		CHANNELIZER (SURFACE MOUNTED)	PAINT TRAFFIC STRIPE (2-COAT)				(N) REMOVE CHANNELIZER (SURFACE MOUNTED)	TYPE III BARRICADE	PORTABLE RADAR TRAILER	DESCRIPTION
					100 mm	100 mm	200 mm	TYPE G	TYPE H		100 mm SOLID WHITE	100 mm DASHED WHITE	100 mm SOLID YELLOW	200 mm SOLID WHITE				
				EA	m	m	m	EA	EA	EA	m	m	m	m	EA	EA	EA	
	STAGE 3B																	
SC-9	"C" 174+62 TO "C" 175+48	OFF-RAMP	36					13						86				
SC-9	"A" 174+60 TO "A" 175+44	SB	27B			84												
SC-9	"A" 174+60 TO "A" 175+44	SB	36					13						84				
SC-9	"C" 173+54 TO "C" 174+62	OFF-RAMP	25						9				108					
SC-9	"C" 173+54 TO "C" 175+64	OFF-RAMP	27B								210							
	STAGE 3C																	
SC-11	"C" 174+74 TO "C" 175+64	OFF-RAMP	27B	8		90												REMOVE FROM STAGE 3B
SC-11	"C" 174+62 TO "C" 175+48	OFF-RAMP	36	13			86											REMOVE FROM STAGE 3B
SC-11	"C" 174+54 TO "C" 174+62	OFF-RAMP	25	1		8												REMOVE FROM STAGE 3B
	STAGE 4																	
SC-13	"A" 170+20 TO "A" 172+90	NB/SB	27B			540												
SC-13	"A" 170+20 TO "A" 172+90	NB/SB	12	40		540												
SC-13	"A" 170+20 TO "A" 172+90	NB/SB	25	40		540												
SC-13	"A" 171+70 TO "A" 172+40	ON-RAMP	36A	11		70												
SC-13	"A" 172+90 TO "A" 174+25	SB													28			
SC-13	"A" 172+90 TO "A" 177+40	SB	27B			450												
SC-13	"A" 172+90 TO "A" 177+40	SB	12	32		450												
SC-13	"A" 172+90 TO "A" 177+40	SB	25	32		450												
SC-13	"A" 174+60 TO "A" 177+40	SB	27B			280												
SC-13	"A" 174+60 TO "A" 177+40	SB	12	21		280												
SC-13	"A" 174+60 TO "A" 177+40	SB	25	21		280												
SC-13	"A" 175+29 TO "A" 177+40	NB	27B			211												
SC-13	"A" 175+29 TO "A" 177+40	NB	12	16		211												
SC-13	"A" 175+29 TO "A" 177+40	NB	25	16		211												
SC-14	"A" 181+20 TO "A" 182+71	SB													15			SB/RT
SC-14	"A" 182+00 TO "A" 182+71	SB													31			SB/LT
SC-14	"A" 182+71 TO "A" 185+41	NB/SB	27B			540												
SC-14	"A" 182+71 TO "A" 185+41	NB/SB	12	38		540												
SC-14	"A" 182+71 TO "A" 185+41	NB/SB	25	38		540												
SC-14	"A" 177+40 TO "A" 179+96	NB/SB	27B			512												
SC-14	"A" 177+40 TO "A" 179+96	NB/SB	12	36		512												
SC-14	"A" 177+40 TO "A" 179+96	NB/SB	25	36		512												
SC-14	"A" 177+40 TO "A" 182+71	SB	27B			531												
SC-14	"A" 177+40 TO "A" 182+71	SB	12	38		531												
SC-14	"A" 177+40 TO "A" 182+71	SB	25	38		531												
	SUBTOTAL THIS SHEET			475		9444	86	26	9		210	0	108	170	74			
	TOTAL THIS SHEET			475		9530		35			488				74			
PD-6	FROM PAVEMENT DELINEATION SHEETS							467										
	TOTAL SHEET Q-4			748	3042	10 671		986		119	15111				47			
	TOTAL SHEET Q-5			170		3498		220		73	4578				72			
	TOTAL			1393	3042	23 699		1708		192	20 177				193	6	2	

(N) - NOT A SEPARATE PAY ITEM, FOR INFORMATION ONLY.

SUMMARY OF QUANTITIES SHEET, EXAMPLE "D-4"

SUMMARY OF QUANTITIES

Q-6

DATE	REVISED BY	DATE REVISED

CALCULATED/DESIGNED BY

CHECKED BY

PROJECT ENGINEER

STATE OF CALIFORNIA - DEPARTMENT OF TRANSPORTATION

DESIGN

Caltrans

09:08 10-APR-2001 dpm2_173.dgn

LAST REVISION 04-02-01 DATE PLOTTED => 10-APR-2001 TIME PLOTTED => 09:08

FOR REDUCED PLANS ORIGINAL SCALE IS IN MILLIMETERS 0 20 40 60 80

USERNAME => trmikesi DGN FILE => dpm2_173.dgn

CU 00000 EA 000000

Return to Section 2 Table of Contents

Return to Section 2 Table of Contents

(Blank)

2-2.19 Sign Plans, Details, and Quantities

Permanent Signing

The sign plans show existing roadside signs and overhead signs that are to be removed, salvaged, relocated, reset, modified, or reconstructed. New roadside signs and overhead signs, which are to be installed or constructed, are also shown on the sign plans.

Roadside signs and overhead signs shall be drawn on the sign plan sheet so that the sign message can be read from the bottom of the sheet. The signs shall not be positioned on the sheet in the direction of traffic.

Each sign or sign structure shall be identified by an individual sign number that shall correspond to that used on the sign plan, sign details and sign quantities list.

Sign quantities for roadside signs and overhead signs shall be summarized in tabular formats. The items for furnish and install sign structures (tubular, truss, lightweight, etc.) are paid for by the kilogram and usually designated as final pay quantities.

When final pay items are included in the sign quantities, the final pay quantities are to be designated on the Engineer's Estimate using (F) or (S-F) as appropriate for the item involved. Do not identify final pay items on the plans.

Items of work shown in the columns of the sign quantities which are not a separate pay item, but are included in other items of work, should be indicated with the symbol "(N)" in the column heading for such items and by adding the following note to the sheet:

(N) = Not a separate pay item, for information only.

Each sheet of the Sign Plans shall have the following note included on them: "This sheet accurate for Sign work only."

DIST	COUNTY	ROUTE	KILOMETER POST TOTAL PROJECT	SHEET No	TOTAL SHEETS

REGISTERED CIVIL ENGINEER

PLANS APPROVAL DATE

REGISTERED PROFESSIONAL ENGINEER No. Exp. CIVIL STATE OF CALIFORNIA

The State of California or its officers or agents shall not be responsible for the accuracy or completeness of electronic copies of this plan sheet.

Caltrans now has a web site! To get to the web site, go to: http://www.dot.ca.gov

Caltrans Metric

NOTES:

1. RECONSTRUCT SIGN STRUCTURE ON ROUTE 94 FROM Sta 128+26 TO Sta 138+15
   SALVAGE EXISTING EMS MODULE
   REUSE EXISTING FLASHING BEACONS
   INSTALL NEW EMS MESSAGE "METER ON"

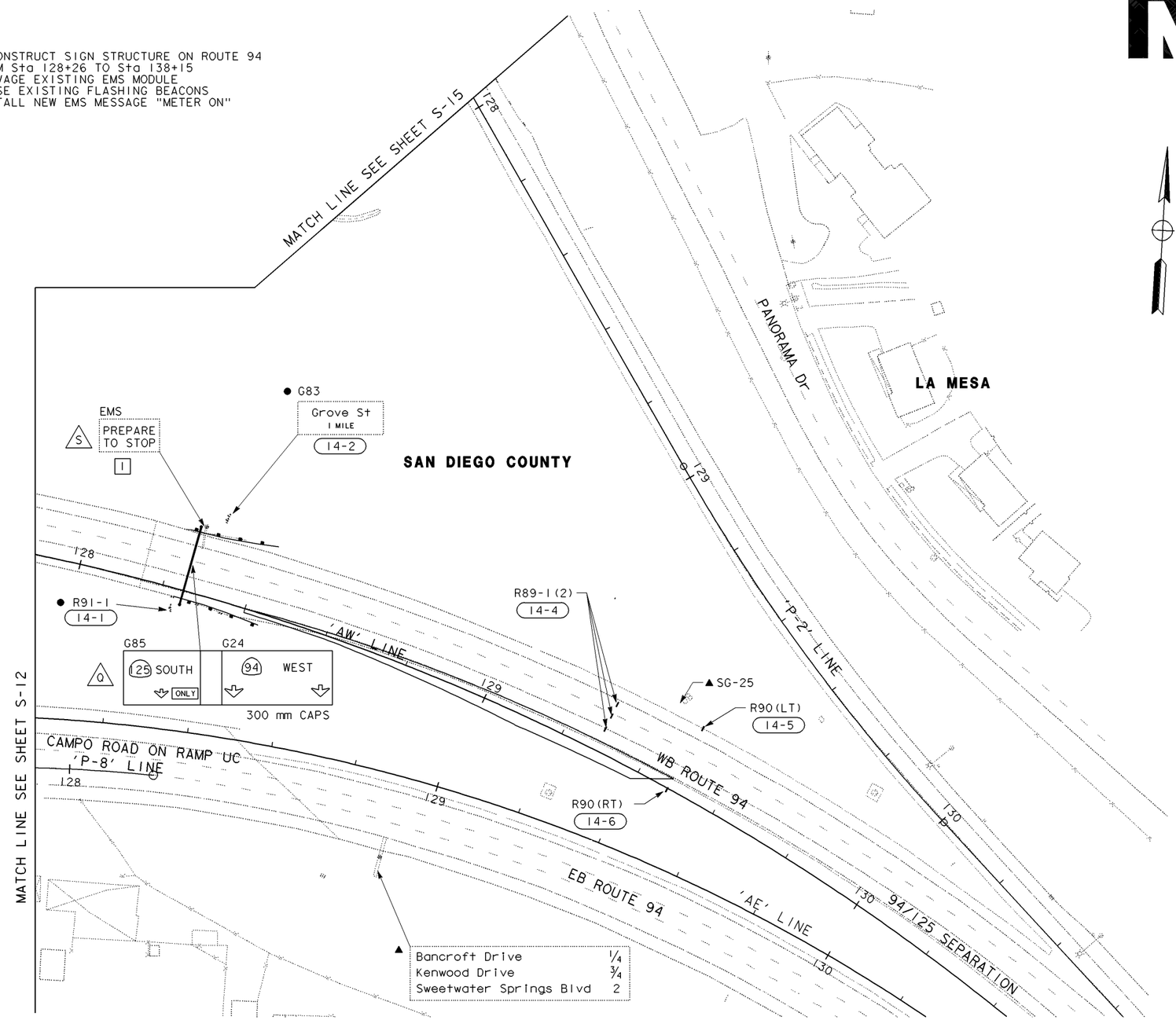

LEGEND

- ▲ EXISTING SIGN TO REMAIN
- ● REMOVE ROADSIDE SIGN
- ■ RELOCATE ROADSIDE SIGN
- ROADSIDE SIGN SINGLE POST
- ROADSIDE SIGN TWO POST
- ROADSIDE SIGN (STRAP AND SADDLE)
- (1-1) ROADSIDE SIGN (WITH NUMBER)
- (A) OVERHEAD SIGN (WITH LETTER)
- EMS EXTINGUISHABLE MESSAGE SIGN

Legend shown on this sheet is for example purposes only. Legend should be shown on the first sheet of Sign Plans.

ALL DIMENSIONS ARE IN METERS UNLESS OTHERWISE SHOWN

SIGN PLAN

SCALE 1:500

S-14

THIS PLAN ACCURATE FOR SIGN WORK ONLY.

DATE	REVISED BY	DATE REVISED

CALCULATED/DESIGNED BY

CHECKED BY

PROJECT ENGINEER

STATE OF CALIFORNIA - DEPARTMENT OF TRANSPORTATION

Caltrans PROJECT DEVELOPMENT

LAST REVISION 04-02-01

DATE PLOTTED => 10-APR-2001
TIME PLOTTED => 09:08

FOR REDUCED PLANS ORIGINAL SCALE IS IN MILLIMETERS 0 20 40 60 80

USERNAME => trmikesl
DGN FILE => dpm2_177.dgn

CU 00000 EA 000000

Return to Section 2 Table of Contents

NOTES:

1. EXACT LOCATION AND POSITION OF ROADSIDE SIGNS TO BE DETERMINED BY THE ENGINEER.
2. POST LENGTHS GIVEN ARE APPROXIMATE. EXACT LENGTH TO BE DETERMINED BY THE ENGINEER.
3. 'C' DIM = VERTICAL CLEARANCE FROM EP TO BOTTOM OF SIGN PANEL.
4. 'D' DIM = TOTAL DEPTH TO BOTTOM SIGN PANEL ON MULTIPLE SIGN INSTALLATION.

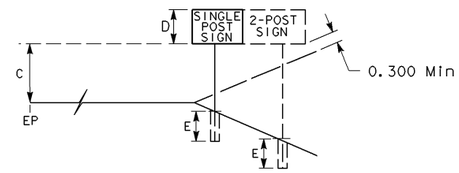

ROADSIDE SIGN QUANTITIES

SHEET No.	SIGN No.	CODE	PANEL SIZE Horiz	PANEL SIZE Vert	'D' Dim	'C' Dim	'E' Min	POST LENGTH Lt	POST LENGTH Rt	POST SIZE 89 x 89	POST SIZE 89 x 140	POST SIZE 140 x 140	ROADSIDE SIGN ONE POST	ROADSIDE SIGN TWO POST	ROADSIDE SIGN RELOCATE	ROADSIDE SIGN REMOVE	INSTALL ROAD-SIDE SIGN (LAM-INIATED WOOD BOX POST)	METAL (RAIL MOUNTED SIGN)	INSTALL SIGN (STRAP & SADDLE BRACKET METHOD)	INSTALL SIGN OVERLAY	REMARKS
			mm	mm	m	m	m	m	m	mm x mm			EA	EA	EA	EA	EA	kg	EA	m^2	
S-1	1-1	W53	610	610	0.9	2.1	1.1	4.1		X			1								
S-2	2-1	W11(Rt)	1219	1219	1.7	1.8	1.5	5.0				X	1								
	2-2	W75(Lt)	1524	1524	2.1	1.8	1.4	4.7	4.0		X			1							
	2-3	W31	762	762												3					
		N MARKER(RED)	457	457																	
	2-4	W31	762	762	1.1	1.5	1.4	4.7			X		1								
		N MARKER(RED)	457	457	0.7																
	2-5	R82-1(1/4)	914	1219	1.2	1.8	1.4	5.1			X		1								
		R82A(SB)	914	457	0.5																
S-3	3-1	W11(Rt)	1219	1219	1.7	1.8	1.5	4.9				X	1								
	3-2	W58	1219	1219		1.8												84			
	3-3	W72A(60)	1219	1219		1.8												81			
	3-4	W31	762	762	1.1	1.5	1.4	4.7			X		1								
		N MARKER(RED)	457	457	0.7																
	3-5	R82-1(1/2)	914	1219	1.2	1.8	1.4	5.1			X		1								
		R82A(SB)	914	457	0.5																
S-4	4-1	W58	1219	1219		1.8												84			
	4-2	W72A(55)	1219	1524		1.8												81			
	4-3	W72A(55)	1219	1524		1.8												81			
	4-4	W75(Lt)	1524	1524		1.8												91			
	4-5	W75(Lt)	1524	1524		1.8												91			
	4-6	W31	762	762	1.1	1.5													3		MOUNT ON FENCE
		N MARKER(RED)	457	457	0.7																
	4-7	W59(Rt)	1219	1219		1.8												84			
S-5	5-1	G7	762	229												1					
		R1	762	762																	
	5-2	W75(Lt)	1524	1524	2.1	1.8	1.5	5.2	5.9			X		1							
	5-3	W59(Rt)	1219	1219		1.8												84			
	5-4	W59(Rt)	1219	1219	1.7	1.8	1.5	4.9				X	1								
	5-5	R18A	1676	1219												1					
	5-6	W73	1524	1524												1					
S-6	6-1	R2(25)	914	1143	1.1	2.1	1.4	4.6			X		1								
	6-2	G7	762	762	0.2	2.1	1.1	4.2		X			1								
		R1	762	762	0.8																
	6-3	G7	762	229												1					
		R2(25)	914	1143																	
	6-4	W53A	762	762	1.1	2.1	1.4	4.6			X		1								
	6-5	R2(25)	915	1145	1.1	2.1	1.4	4.6			X		1								
	6-6	W75(Lt)	1524	1524	2.1	1.8	1.4	4.7	4.0		X			1							
	6-7	W60(Rt)	1219	1219	1.7	1.8	1.5	4.7				X	1								
SUBTOTAL (THIS SHEET)													13	3	0	7	0	761	3	0	

Caltrans Metric

DIST	COUNTY	ROUTE	KILOMETER POST TOTAL PROJECT	SHEET No	TOTAL SHEETS

REGISTERED CIVIL ENGINEER

PLANS APPROVAL DATE

REGISTERED PROFESSIONAL ENGINEER No. Exp. CIVIL STATE OF CALIFORNIA

The State of California or its officers or agents shall not be responsible for the accuracy or completeness of electronic copies of this plan sheet.

Caltrans now has a web site! To get to the web site, go to: http://www.dot.ca.gov

DATE	REVISED BY	DATE REVISED

CALCULATED/DESIGNED BY

CHECKED BY

PROJECT ENGINEER

STATE OF CALIFORNIA - DEPARTMENT OF TRANSPORTATION

Caltrans PROJECT DEVELOPMENT

SIGN QUANTITIES

S-20

LAST REVISION 04-04-01 | DATE PLOTTED => 10-APR-2001 | TIME PLOTTED => 09:08

FOR REDUCED PLANS ORIGINAL SCALE IS IN MILLIMETERS 0 20 40 60 80

USERNAME => trmikesl
DGN FILE => dpm2_178.dgn

CU 00000 EA 000000

Return to Section 2 Table of Contents

DIST	COUNTY	ROUTE	KILOMETER POST TOTAL PROJECT	SHEET No	TOTAL SHEETS

REGISTERED CIVIL ENGINEER

PLANS APPROVAL DATE

REGISTERED PROFESSIONAL ENGINEER No. Exp. CIVIL STATE OF CALIFORNIA

The State of California or its officers or agents shall not be responsible for the accuracy or completeness of electronic copies of this plan sheet.

Caltrans now has a web site! To get to the web site, go to: http://www.dot.ca.gov

Caltrans Metric

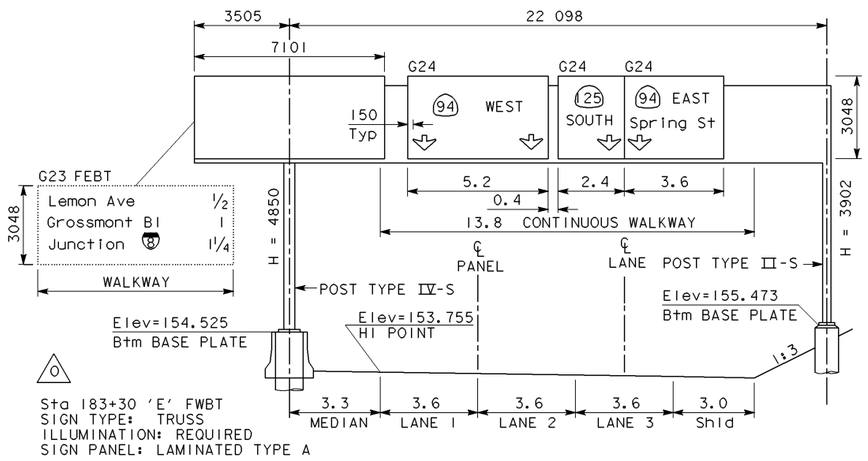

O

Sta 183+30 'E' FWBT
SIGN TYPE: TRUSS
ILLUMINATION: REQUIRED
SIGN PANEL: LAMINATED TYPE A

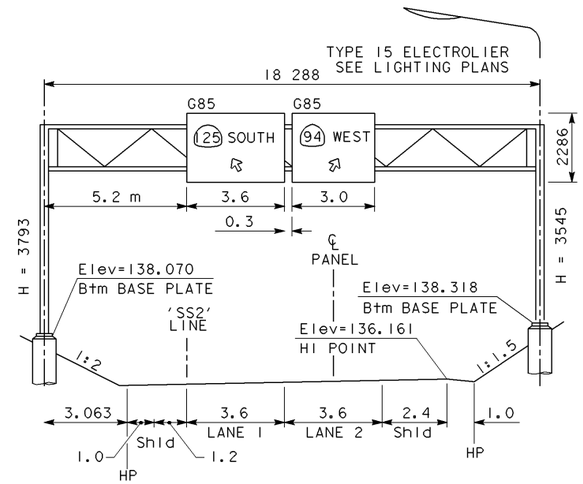

R

Sta 188+44 'SS2' FWBT
SIGN TYPE: LIGHTWEIGHT TYPE A-2
POSTS: NPS 12, 't' 12.7
ARMS: TS 254x152x9.5
ILLUMINATION: REQUIRED
SIGN PANEL: LAMINATED TYPE A

P

Sta 175+15 '94W' FWBT
SIGN TYPE: TRUSS
ILLUMINATION: REQUIRED
SIGN PANEL: LAMINATED TYPE A

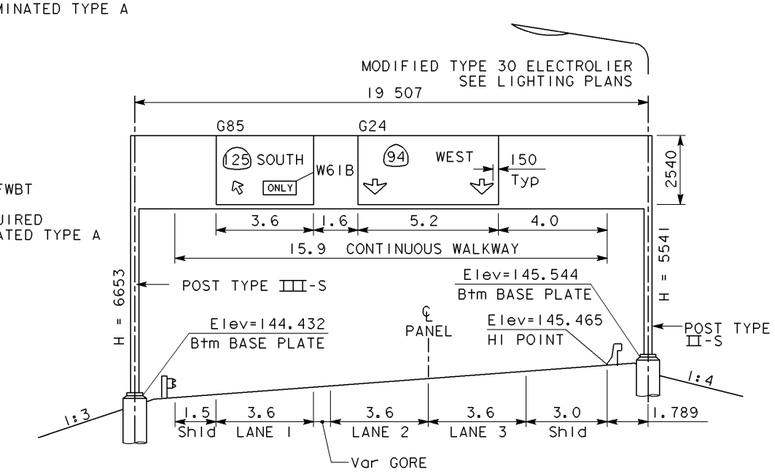

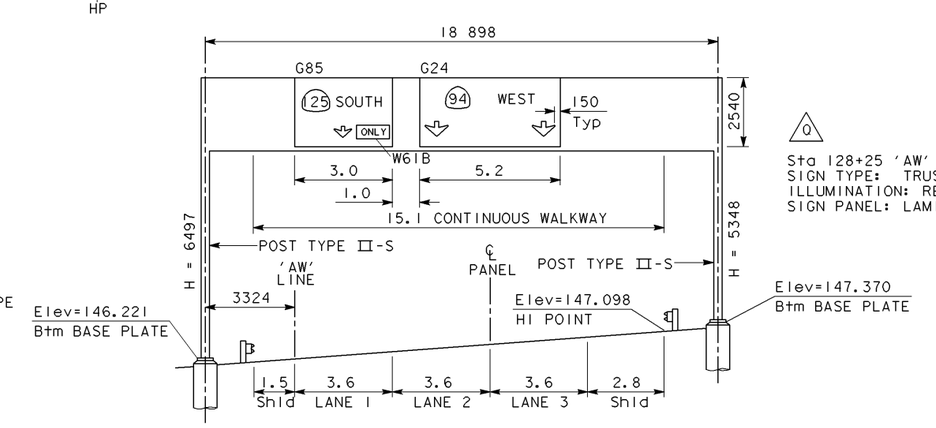

O

Sta 128+25 'AW' FWBT
SIGN TYPE: TRUSS
ILLUMINATION: REQUIRED
SIGN PANEL: LAMINATED TYPE A

N

Sta 177+40 'E' FWBT
SIGN TYPE: TRUSS
ILLUMINATION: REQUIRED
SIGN PANEL: LAMINATED TYPE A

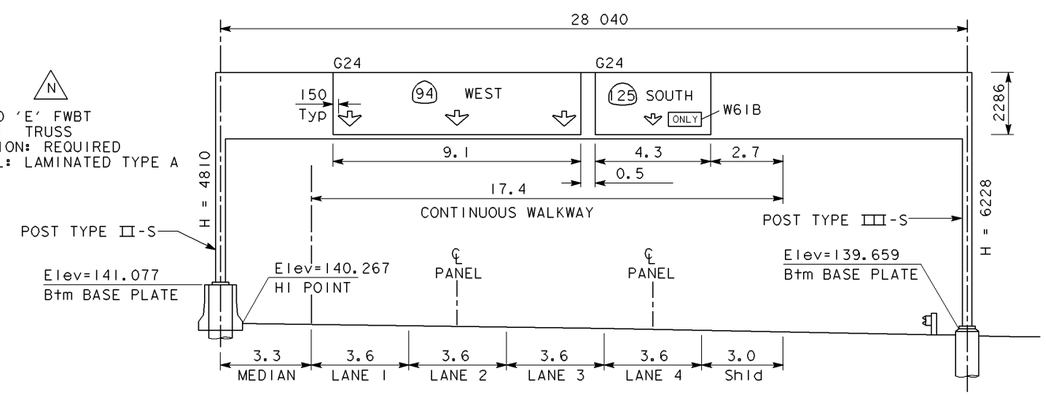

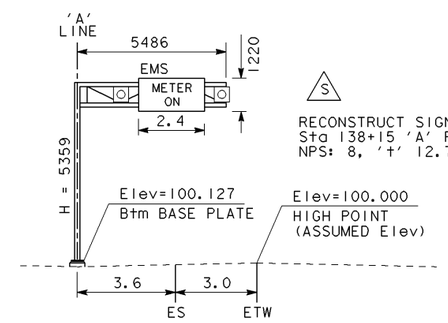

S

RECONSTRUCT SIGN STRUCTURE
Sta 138+15 'A' FWBT
NPS: 8, 't' 12.7

ALL DIMENSIONS ARE IN METERS UNLESS OTHERWISE SHOWN

OVERHEAD SIGN DETAILS

NO SCALE

S-28

DATE	REVISED BY	DATE REVISED

CALCULATED/DESIGNED BY

CHECKED BY

PROJECT ENGINEER

STATE OF CALIFORNIA - DEPARTMENT OF TRANSPORTATION

Caltrans **DESIGN**

LAST REVISION 04-02-01 | DATE PLOTTED => 10-APR-2001 TIME PLOTTED => 09:08

FOR REDUCED PLANS ORIGINAL SCALE IS IN MILLIMETERS 0 20 40 60 80

USERNAME => trmikesl
DGN FILE => dpm2_179.dgn

CU 00000 EA 000000

Return to Section 2 Table of Contents

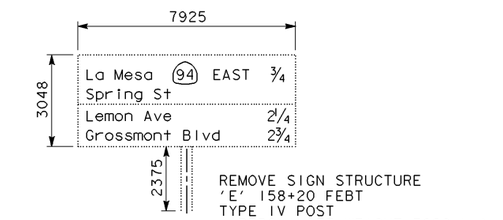

REMOVE SIGN STRUCTURE
'E' 158+20 FEBT
TYPE IV POST
(APPROXIMATE WEIGHT 3080 kg)*

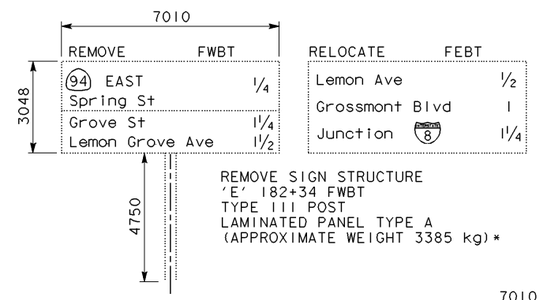

REMOVE SIGN STRUCTURE
'E' 182+34 FWBT
TYPE III POST
LAMINATED PANEL TYPE A
(APPROXIMATE WEIGHT 3385 kg)*

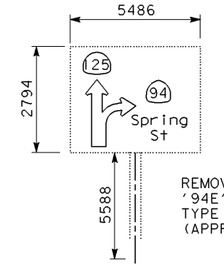

REMOVE SIGN STRUCTURE
'94E' 163+93 Rt FEBT
TYPE III POST
(APPROXIMATE WEIGHT 2770 kg)*

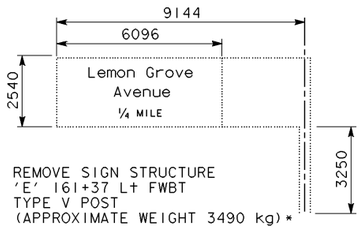

REMOVE SIGN STRUCTURE
'E' 161+37 Lt FWBT
TYPE V POST
(APPROXIMATE WEIGHT 3490 kg)*

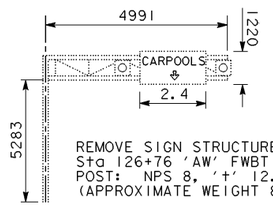

REMOVE SIGN STRUCTURE
Sta 126+76 'AW' FWBT
POST: NPS 8, 't' 12.7
(APPROXIMATE WEIGHT 820 kg)*

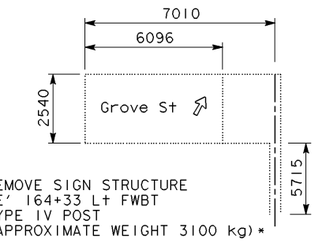

REMOVE SIGN STRUCTURE
'E' 164+33 Lt FWBT
TYPE IV POST
(APPROXIMATE WEIGHT 3100 kg)*

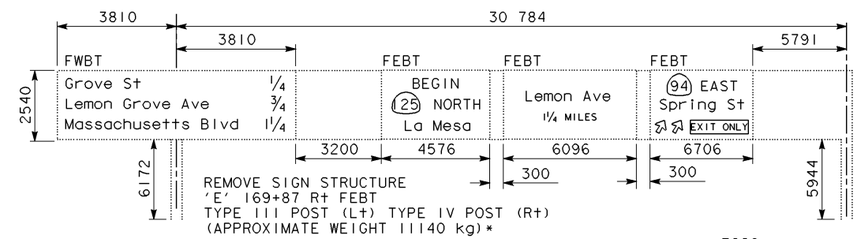

REMOVE SIGN STRUCTURE
'E' 169+87 Rt FEBT
TYPE III POST (Lt) TYPE IV POST (Rt)
(APPROXIMATE WEIGHT 1140 kg)*

* APPROXIMATE WEIGHT SHOWN FOR INFORMATION ONLY. REMOVE SIGN STRUCTURE PAID BY UNIT PRICE.

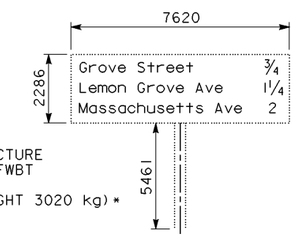

REMOVE SIGN STRUCTURE
'94W' 175+20 Lt FWBT
TYPE III POST
(APPROXIMATE WEIGHT 3020 kg)*

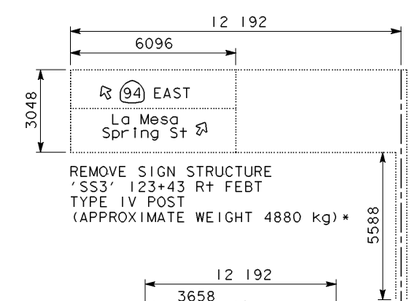

REMOVE SIGN STRUCTURE
'SS3' 123+43 Rt FEBT
TYPE IV POST
(APPROXIMATE WEIGHT 4880 kg)*

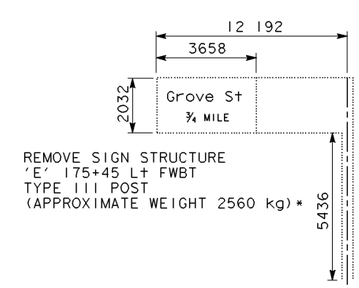

REMOVE SIGN STRUCTURE
'E' 175+45 Lt FWBT
TYPE III POST
(APPROXIMATE WEIGHT 2560 kg)*

ALL DIMENSIONS ARE IN MILLIMETERS UNLESS OTHERWISE SHOWN

OVERHEAD SIGN QUANTITIES

SIGN No. △	SHEET	LOCATION	INSTALL SIGN STRUCTURE TRUSS	INSTALL SIGN STRUCTURE LIGHT-WEIGHT	FURNISH SIGN STRUCTURE TRUSS	FURNISH SIGN STRUCTURE LIGHT-WEIGHT	RECONSTRUCT SIGN STRUCTURE	CIDH CONCRETE PILE (SIGN FOUNDATION) 760 mm Lt	760 mm Rt	920 mm Lt	920 mm Rt	REMOVE SIGN STRUCTURE	REMARKS
			kg	kg	kg	kg		m	m	m	m	EA	
A	S-2 & 22	'125N' 169+80 FNBT	8060		8060			5.5	5.5				
B	S-3 & 22	'NW' 174+20.420 FNBT	10000		10000								SEE STRUCTURE PLANS Br No. 57-1060G
C	S-4 & 22	'NE' 176+52 FNBT	8190		8190								SEE STRUCTURE PLANS Br No. 57-1060G
D	S-4 & 22	'NW' 178+12 FWBT		1130		1130							SEE STRUCTURE PLANS Br No. 57-1056G
H	S-16 & 21	'E' 157+40 FEBT	8720		8720			5.5	5.5				
I	S-17 & 21	'E' 160+87 FEBT	12800		12800				5.5	7.0			
J	S-18 & 22	'E' 163+89 FEBT	8880		8880			5.5	5.5				
K	S-5 & 22	'NE' 181+48 FEBT	3270		3270						4.0		
L	S-9 & 22	'94E' 172+70 FEBT	10460		10460					6.0	6.0		
M	S-9 & 21	'E' 172+80 FWBT	9090		9090			5.5	5.5				
N	S-13 & 23	'E' 177+40 FWBT	8060		8060			5.0	5.5				
O	S-23	'E' 183+30 FWBT	8570		8570				5.5	6.0			
P	S-13 & 23	'94W' 175+15 FWBT	6600		6600			5.0	5.0				
Q	S-14 & 22	'AW' 128+25 FWBT	6150		6150			5.0	5.0				
R	S-10 & 23	'SS2' 188+44 FWBT		4010		4010		4.6	4.6				
S	S-14 & 22	'AW' 128+26 Lt FWBT					1	3.4					
-	S-16 & 21	'E' 158+20 FEBT										1	
-	S-17 & 21	'E' 161+37 Lt FWBT										1	
-	S-18 & 22	'94E' 163+93 Rt FEBT										1	
-	S-18 & 21	'E' 164+33 Lt FWBT										1	
-	S-7 & 21	'E' 169+87 Rt FEBT										1	
-	S-9 & 22	'SS3' 123+43 Rt FEBT										1	
-	S-13 & 23	'94W' 175+20 Lt FWBT										1	
-	S-12 & 23	'AW' 126+76 Rt FWBT										1	
-	S-13 & 23	'E' 175+45 Lt FWBT										1	
-	S-23	'E' 182+34 FWBT										1	
SUBTOTAL								45.0	53.1	19	10		
TOTAL			108850	5140	108850	5140	1	98.1		29		10	

OVERHEAD SIGN DETAILS AND QUANTITIES

NO SCALE

S-30

DIST	COUNTY	ROUTE	KILOMETER POST TOTAL PROJECT	SHEET No	TOTAL SHEETS

REGISTERED CIVIL ENGINEER

PLANS APPROVAL DATE

REGISTERED PROFESSIONAL ENGINEER No. Exp. CIVIL STATE OF CALIFORNIA

The State of California or its officers or agents shall not be responsible for the accuracy or completeness of electronic copies of this plan sheet.

Caltrans now has a web site! To get to the web site, go to: http://www.dot.ca.gov

Caltrans Metric

DATE | REVISED BY | DATE REVISED

CALCULATED/DESIGNED BY | CHECKED BY

PROJECT ENGINEER

STATE OF CALIFORNIA - DEPARTMENT OF TRANSPORTATION

Caltrans DESIGN

LAST REVISION 04-04-01 | DATE PLOTTED => 10-APR-2001 | TIME PLOTTED => 09:08

FOR REDUCED PLANS ORIGINAL SCALE IS IN MILLIMETERS 0 20 40 60 80

USERNAME => trmikesl
DGN FILE => dpm2_180.dgn

CU 00000 | EA 000000

Return to Section 2 Table of Contents

2-2.20 Retaining Wall Plans, Details and Quantities

Standard Plans are available for a variety of earth retaining systems (retaining walls). Loading conditions and foundation requirements are outlined in the Standard Plans. For sites with requirements that are not covered by the Standard Plans, a special design earth retaining system is required. Refer to Topic 210 of the Highway Design Manual.

A foundation investigation should be made for all locations at which a retaining wall is being considered. Foundation investigations are made either by the district's materials unit or the Division of Engineering Services-Office of Structures Design Foundation. When log of test boring information is developed, it shall be included with the retaining wall plans as log of test boring sheets.

The retaining wall plans should include a plan view, typical section and quantities. The plan view is to show the retaining wall layout line and the varying width of the footing. The elevation view should show (and be identified as such): top of wall and top of footing elevations, gutter, finished grade, and original groundline at the wall layout line. The elevation view shall also show: the footing elevation, the pile cap elevation if on piles, height of wall or elevation of the wall, thickness of footing (if on spread footing), expansion joint locations, and pile spacing and depth. The original ground, finished grade and drainage at back of wall is to be shown on the retaining wall typical section.

The elevation and location of existing facilities to be abandoned or to remain in place during retaining wall construction shall be shown.

Special wall details, as applicable to wall construction, such as sign bases, utility openings, drainage features, fences, and concrete barriers should be shown on the plan sheet of the wall concerned or included on a separate detail sheet with the wall plan sheets.

Where more than one wall is to be constructed on the project, a cumulative quantity summary identifying quantities for each wall involved, shall be included in the plans.

When both Structures and District designed retaining walls are in a project care should be exercised in combining the quantities and contract items.

Retaining walls are to be shown on the Typical Cross Sections for relative placement.

Each sheet of the Retaining Wall Plans shall have the following note included on them: "This plan accurate for Retaining Wall work only."

Return to Section 2 Table of Contents, page 2-187

DIST	COUNTY	ROUTE	KILOMETER POST TOTAL PROJECT	SHEET No	TOTAL SHEETS

REGISTERED CIVIL ENGINEER

PLANS APPROVAL DATE

REGISTERED PROFESSIONAL ENGINEER No. Exp. CIVIL STATE OF CALIFORNIA

The State of California or its officers or agents shall not be responsible for the accuracy or completeness of electronic copies of this plan sheet.

Caltrans now has a web site! To get to the web site, go to: http://www.dot.ca.gov

Caltrans Metric

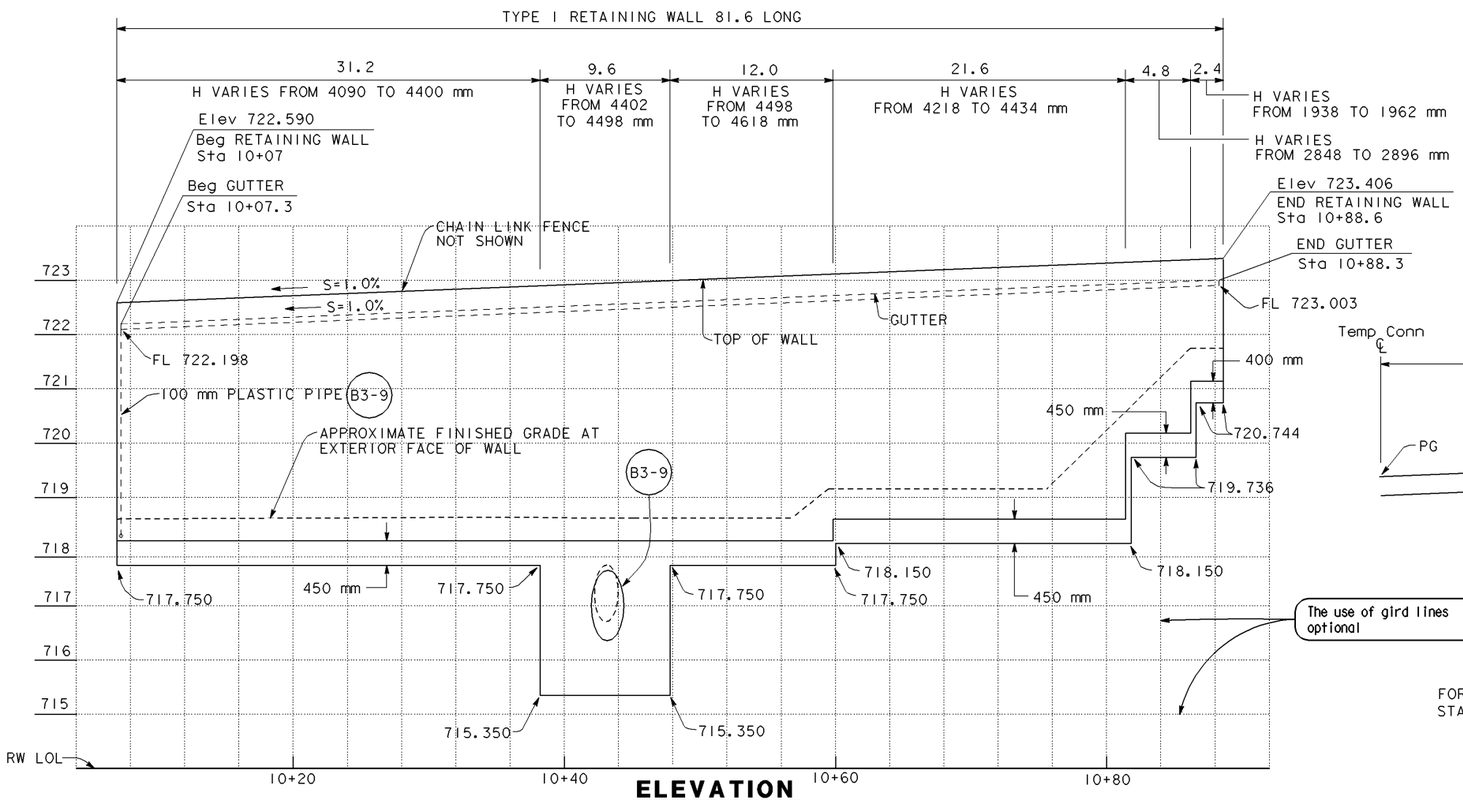

ELEVATION

SCALE Horiz 1:200
Vert 1:50

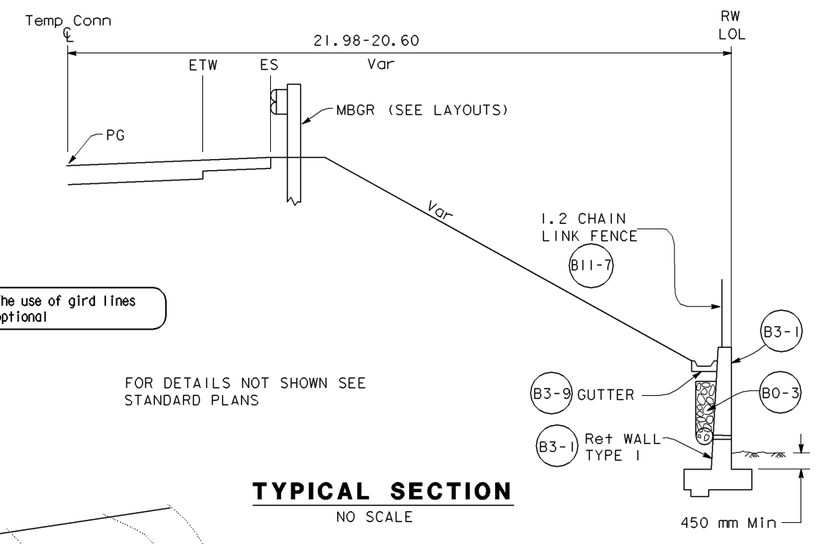

FOR DETAILS NOT SHOWN SEE STANDARD PLANS

TYPICAL SECTION

NO SCALE

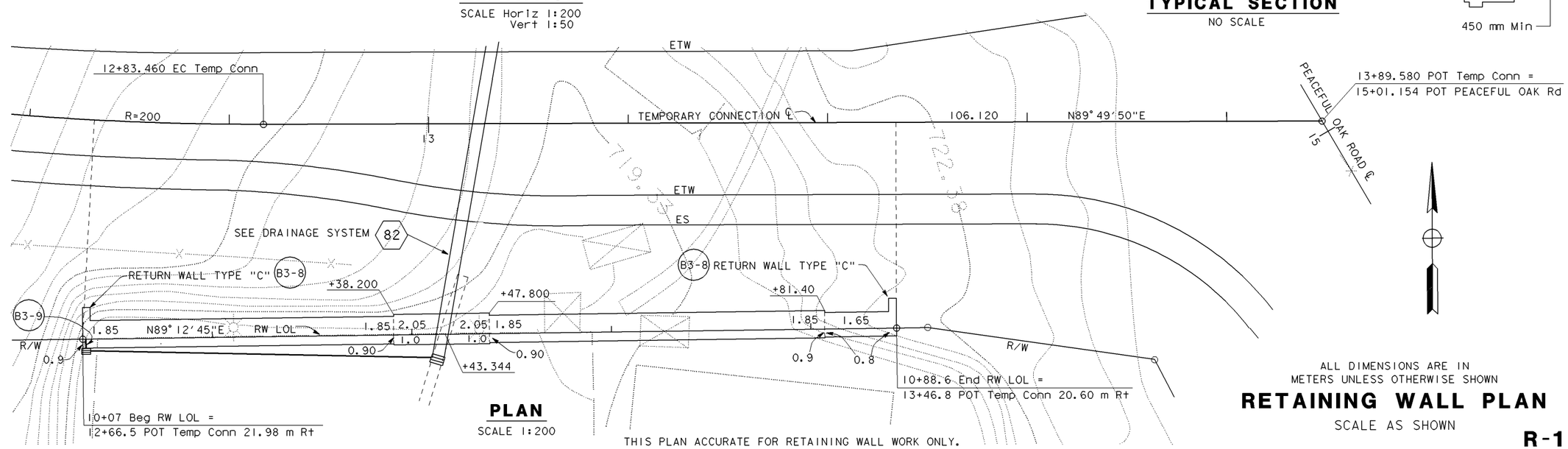

PLAN

SCALE 1:200

THIS PLAN ACCURATE FOR RETAINING WALL WORK ONLY.

ALL DIMENSIONS ARE IN METERS UNLESS OTHERWISE SHOWN

RETAINING WALL PLAN

SCALE AS SHOWN

R-1

DATE	REVISED BY	DATE REVISED

CALCULATED/DESIGNED BY

CHECKED BY

PROJECT ENGINEER

STATE OF CALIFORNIA - DEPARTMENT OF TRANSPORTATION

Caltrans DESIGN

LAST REVISION 04-02-01

DATE PLOTTED => 10-APR-2001
TIME PLOTTED => 09:09

FOR REDUCED PLANS ORIGINAL SCALE IS IN MILLIMETERS 0 20 40 60 80

USERNAME => trmikesl
DGN FILE => dpm2_183.dgn

CU 00000 EA 000000

Return to Section 2 Table of Contents

DIST	COUNTY	ROUTE	KILOMETER POST TOTAL PROJECT	SHEET No	TOTAL SHEETS

REGISTERED CIVIL ENGINEER

PLANS APPROVAL DATE

REGISTERED PROFESSIONAL ENGINEER No. Exp. CIVIL STATE OF CALIFORNIA

The State of California or its officers or agents shall not be responsible for the accuracy or completeness of electronic copies of this plan sheet.

Caltrans now has a web site! To get to the web site, go to: http://www.dot.ca.gov

Caltrans Metric

DATE	REVISED BY	DATE REVISED

CALCULATED/DESIGNED BY

CHECKED BY

PROJECT ENGINEER

STATE OF CALIFORNIA - DEPARTMENT OF TRANSPORTATION

Caltrans DESIGN

RETAINING WALL

LOCATION	DESCRIPTION	QUANTITIES
Temp Conn Sta 12+66.5 TO Sta 13+46.8	STRUCTURE EXCAVATION (RETAINING WALL)	446 m3
	STRUCTURE BACKFILL (RETAINING WALL)	801 m3
	PERVIOUS BACKFILL MATERIAL (RETAINING WALL)	73 m3
	STRUCTURAL CONCRETE (RETAINING WALL)	328.8 m3
	BAR REINFORCING STEEL (RETAINING WALL)	14 551 kg
	MINOR CONCRETE (GUTTER)	7 m3

RETAINING WALL QUANTITIES

R-2

LAST REVISION 04-02-01

DATE PLOTTED => 10-APR-2001
TIME PLOTTED => 09:09

FOR REDUCED PLANS ORIGINAL SCALE IS IN MILLIMETERS 0 20 40 60 80

USERNAME => trmikesl
DGN FILE => dpm2_184.dgn

CU 00000

EA 000000

Return to Section 2 Table of Contents

DIST	COUNTY	ROUTE	KILOMETER POST TOTAL PROJECT	SHEET No	TOTAL SHEETS

REGISTERED CIVIL ENGINEER

PLANS APPROVAL DATE

REGISTERED PROFESSIONAL ENGINEER No. Exp. CIVIL STATE OF CALIFORNIA

The State of California or its officers or agents shall not be responsible for the accuracy or completeness of electronic copies of this plan sheet.

Caltrans now has a web site! To get to the web site, go to: http://www.dot.ca.gov

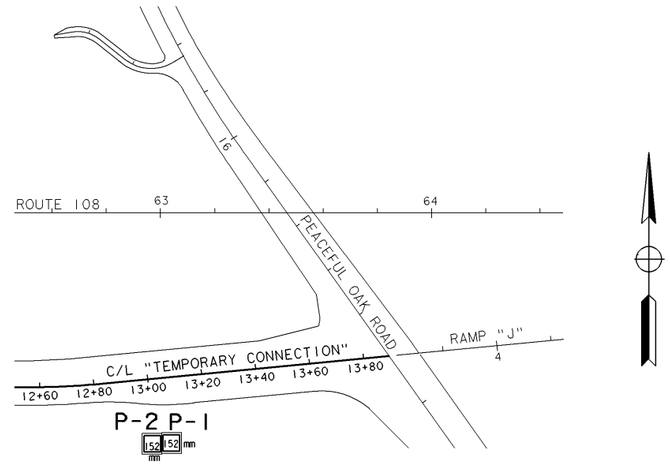

PLAN VIEW

SCALE 1:1000

BENCH MARK

Elevation taken from field logs

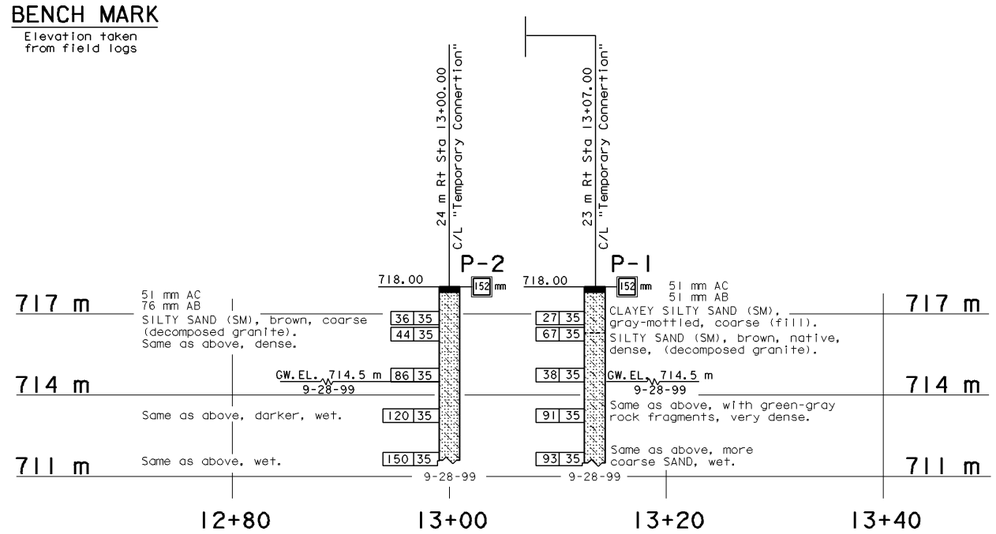

PROFILE

Horiz 1:250
Vert 1:100

R-3

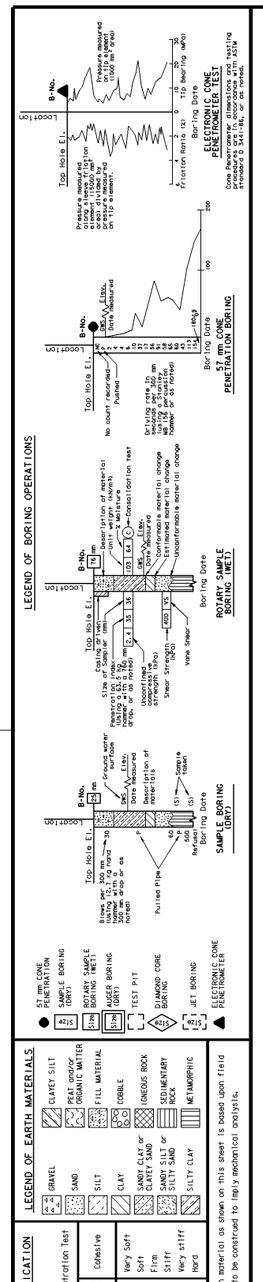

NOTE: Classification of earth material as shown on this sheet is based upon field inspection and is not to be construed to imply mechanical analysis.

DIVISION OF ENGINEERING SERVICES	STRUCTURE FOUNDATIONS	FIELD INVESTIGATION BY:	STATE OF CALIFORNIA DEPARTMENT OF TRANSPORTATION	DIVISION OF STRUCTURES STRUCTURE DESIGN	BRIDGE NO.	TEMPORARY CONNECTION RETAINING WALL
DRAWN BY					KILOMETER POST	LOG OF TEST BORINGS
CHECKED BY						

OSF CIVIL LOG OF TEST BORINGS SHEET (METRIC) (REV. 3/1/99)

ORIGINAL SCALE IN MILLIMETERS FOR REDUCED PLANS 0 10 20 30 40 50 60 70 80 90 100

CU 00000
EA 000000

FILE => dpm2_185.dgn

DISREGARD PRINTS BEARING EARLIER REVISION DATES

REVISION DATES (PRELIMINARY STAGE ONLY) | SHEET | OF

USERNAME => trnikesl DATE PLOTTED => 10-APR-2001 TIME PLOTTED => 09:09

04-02-01

Return to Section 2 Table of Contents

Return to Section 2 Table of Contents

(Blank)

2-2.21 Sound Wall Plans, Details, and Quantities

Standard drawings for noise barriers (sound walls) have been developed by Office of Structures Design and insertable sheets are available to the districts. The standard designs include several material options for construction of sound walls. Refer to Section 1100 of the Highway Design Manual.

As a minimum, the sound wall plan sheets are to show the horizontal alignment of the wall, the wall profile and a typical section. The information required for the construction of sound walls is similar to that required for the construction of retaining walls (see Section 2-2.20). The sound wall plans shall also include the applicable standard sound wall detail sheets and aesthetic features sheet. For additional design criteria refer to Topic 1102 of the Highway Design Manual.

A foundation investigation should be made for all locations at which a sound wall is being considered. Foundation investigations are made either by the district's materials unit or the Division of Engineering Services - Office of Structures Design Foundation. When log of test boring information is developed, it shall be included with the sound wall plans as log of test boring sheets.

Special wall details, as applicable to wall construction, such as utility openings, drainage features, fences, and concrete barriers should be shown on the plan sheet of the wall concerned or included on a separate detail sheet with the sound wall plan sheets.

Where more than one sound wall is to be constructed on the project, a cumulative quantity summary identifying quantities for each sound wall involved, shall be included in the plans.

Each sheet of the Sound Wall Plans shall have the following note included on them: "This plan accurate for Sound Wall work only."

DIST	COUNTY	ROUTE	KILOMETER POST TOTAL PROJECT	SHEET No	TOTAL SHEETS

REGISTERED CIVIL ENGINEER

PLANS APPROVAL DATE

REGISTERED PROFESSIONAL ENGINEER No. Exp. CIVIL STATE OF CALIFORNIA

The State of California or its officers or agents shall not be responsible for the accuracy or completeness of electronic copies of this plan sheet.

Caltrans now has a web site! To get to the web site, go to: http://www.dot.ca.gov

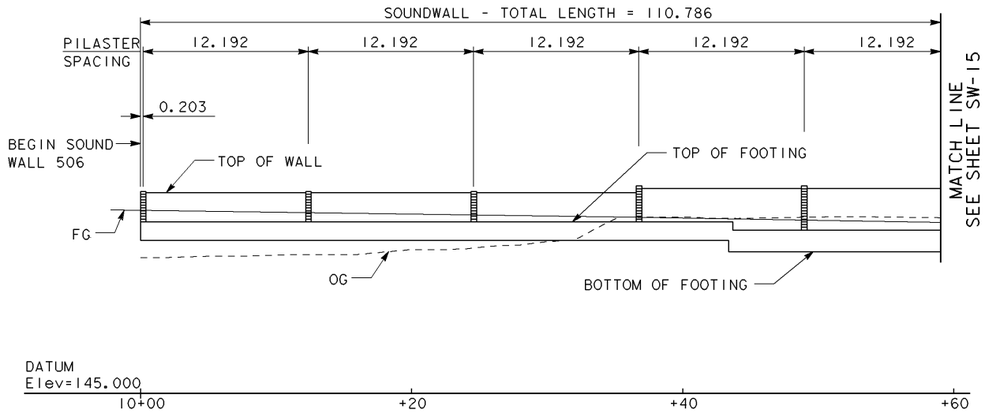

ELEVATION
SCALE 1:200

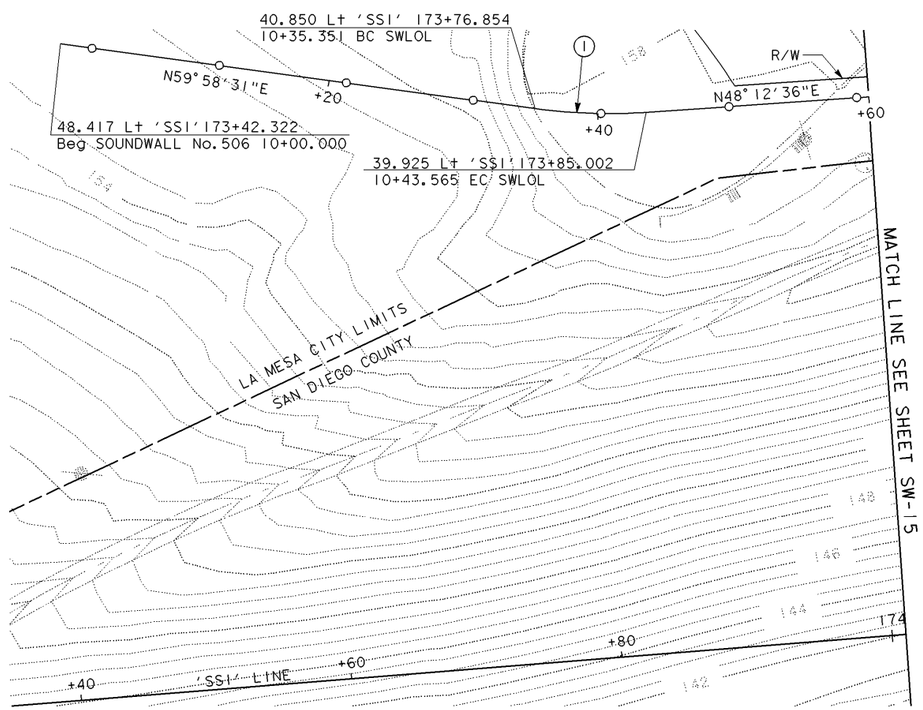

PLAN
SCALE 1:200

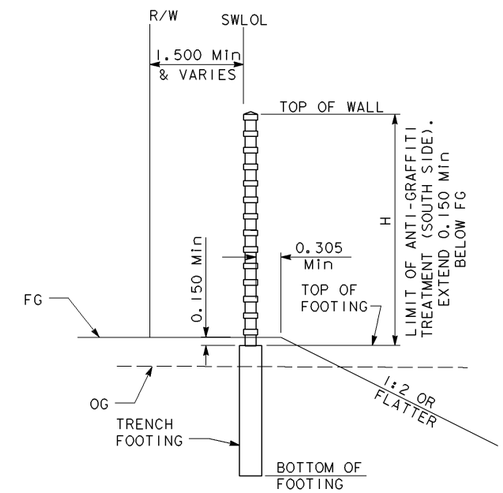

NOTE: FOR REINFORCEMENT AND DETAILS NOT SHOWN, SEE "SOUND WALL - MASONRY BLOCK ON FOOTING" SHEETS.

TYPICAL SECTION
NO SCALE

CURVE DATA

No.	R	Δ	T	L
1	40.000	11°45'55"	4.121	8.214

ALL DIMENSIONS ARE IN METERS UNLESS OTHERWISE SHOWN

SOUND WALL PLAN
SOUND WALL No. 506

SCALE AS SHOWN

SW-14

THIS PLAN ACCURATE FOR SOUND WALL WORK ONLY.

STATE OF CALIFORNIA - DEPARTMENT OF TRANSPORTATION

Caltrans PROJECT DEVELOPMENT

PROJECT ENGINEER

CALCULATED/DESIGNED BY

CHECKED BY

DATE REVISED BY

DATE REVISED

LAST REVISION 04-02-01

DATE PLOTTED => 10-APR-2001
TIME PLOTTED => 09:09

FOR REDUCED PLANS ORIGINAL SCALE IS IN MILLIMETERS 0 20 40 60 80

USERNAME => trmikesl
DGN FILE => dpm2_189.dgn

CU 00000

EA 000000

Return to Section 2 Table of Contents

DIST	COUNTY	ROUTE	KILOMETER POST TOTAL PROJECT	SHEET No	TOTAL SHEETS

REGISTERED CIVIL ENGINEER

PLANS APPROVAL DATE

REGISTERED PROFESSIONAL ENGINEER No. Exp. CIVIL STATE OF CALIFORNIA

The State of California or its officers or agents shall not be responsible for the accuracy or completeness of electronic copies of this plan sheet.

Caltrans now has a web site! To get to the web site, go to: http://www.dot.ca.gov

Caltrans Metric

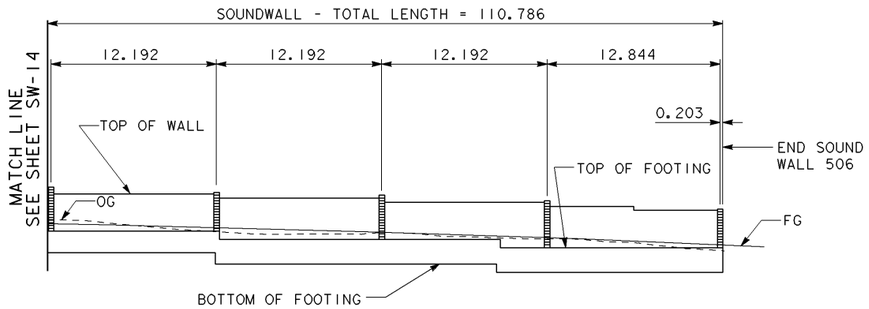

ELEVATION
SCALE 1:200

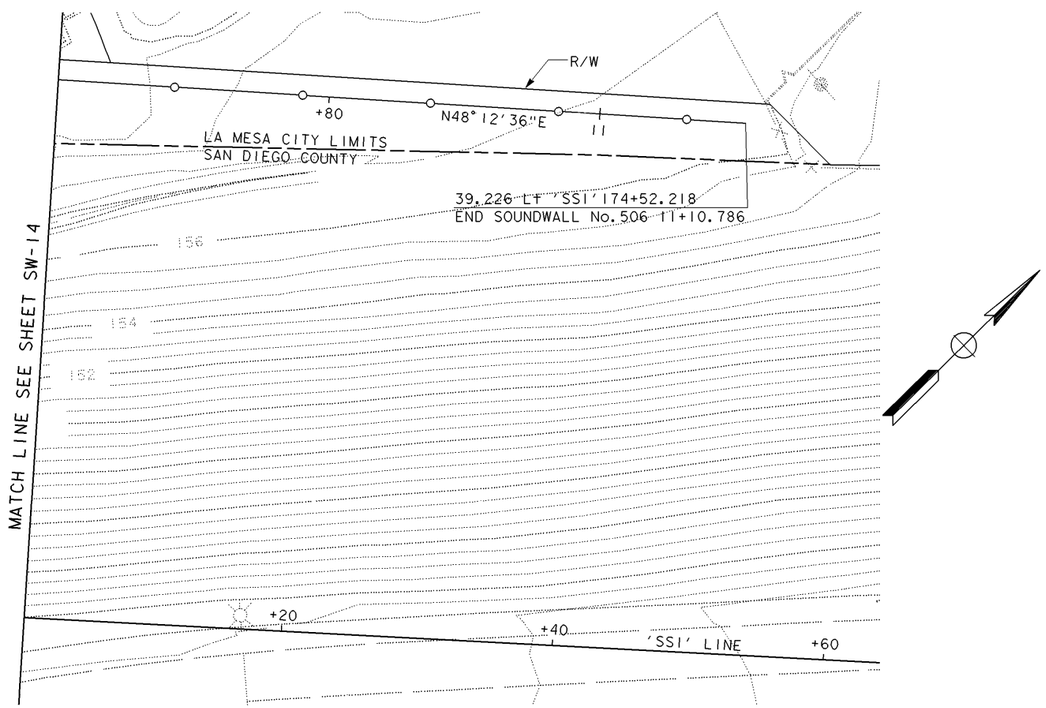

PLAN
SCALE 1:200

SOUNDWALL ELEVATIONS

SWLOL	TOP OF WALL	TOP OF FOOTING	BOTTOM OF FOOTING	FINISHED GRADE
10+00.000	159.800	157.665	155.684	158.500
10+36.779	159.800	157.665	155.684	157.984
10+36.779	160.105	157.665	155.684	157.984
10+43.688	160.105	157.665	155.684	157.868
10+43.688	160.105	157.055	155.074	157.868
10+61.163	160.105	157.055	155.074	157.572
10+61.163	159.800	157.055	155.074	157.572
10+73.567	159.800	157.055	155.074	157.281
10+73.567	159.495	156.445	154.464	157.281
10+85.547	159.495	156.445	154.464	156.952
10+85.547	159.190	156.445	154.464	156.952
10+94.293	159.190	156.445	154.464	156.665
10+94.293	159.190	155.835	153.854	156.665
10+97.536	159.190	155.835	153.854	156.559
10+97.536	158.885	155.835	153.854	156.559
11+04.114	158.885	155.835	153.854	156.293
11+04.114	158.580	155.835	153.854	156.293
11+10.786	158.580	155.835	153.854	156.004

ALL DIMENSIONS ARE IN METERS UNLESS OTHERWISE SHOWN

SOUND WALL PLAN
SOUND WALL No. 506

SCALE AS SHOWN

SW-15

THIS PLAN ACCURATE FOR SOUND WALL WORK ONLY.

DATE	REVISED BY	DATE REVISED

CALCULATED/DESIGNED BY

CHECKED BY

PROJECT ENGINEER

STATE OF CALIFORNIA - DEPARTMENT OF TRANSPORTATION

Caltrans PROJECT DEVELOPMENT

LAST REVISION 04-02-01

DATE PLOTTED => 10-APR-2001
TIME PLOTTED => 09:09

FOR REDUCED PLANS ORIGINAL SCALE IS IN MILLIMETERS 0 20 40 60 80

USERNAME => trmikesl
DGN FILE => dpm2_190.dgn

CU 00000

EA 000000

Return to Section 2 Table of Contents

DIST	COUNTY	ROUTE	KILOMETER POST TOTAL PROJECT	SHEET No	TOTAL SHEETS

REGISTERED CIVIL ENGINEER

PLANS APPROVAL DATE

REGISTERED PROFESSIONAL ENGINEER No. Exp. CIVIL STATE OF CALIFORNIA

The State of California or its officers or agents shall not be responsible for the accuracy or completeness of electronic copies of this plan sheet.

Caltrans now has a web site! To get to the web site, go to: http://www.dot.ca.gov

Caltrans Metric

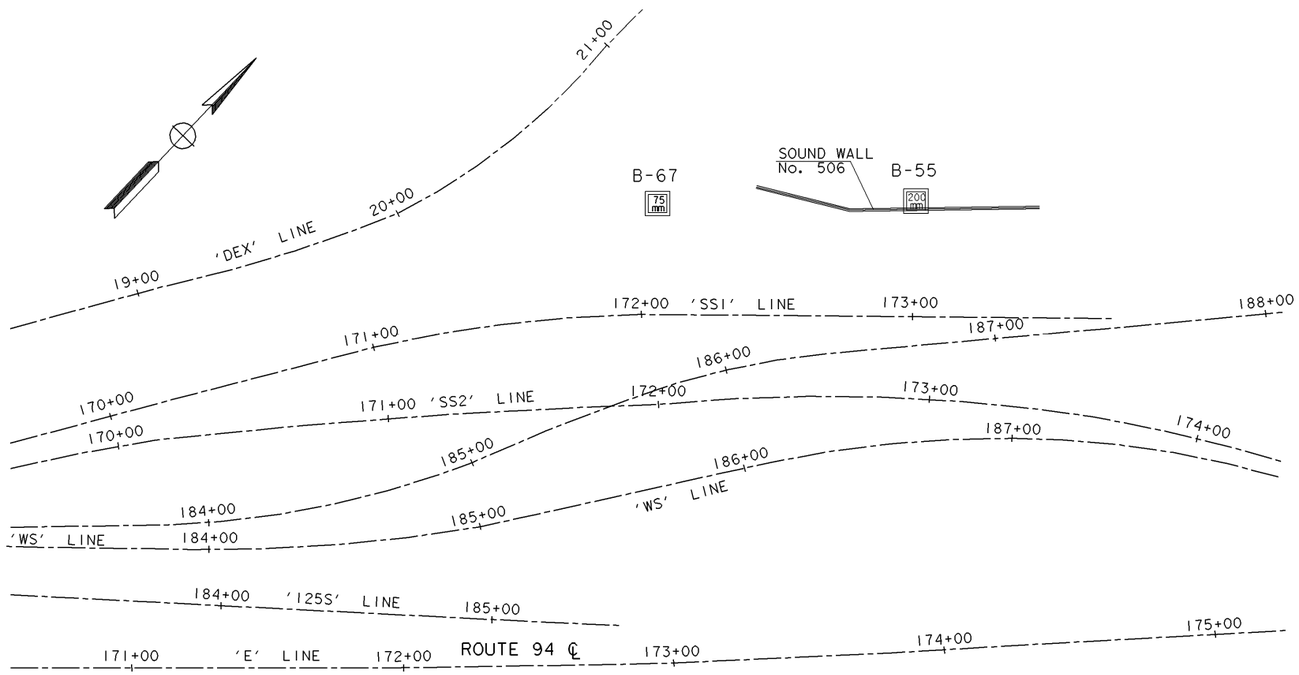

PLAN

SCALE 1:1000

NOTES:

1. BENCHMARK - 2-1/4" CADT DISK IN 2" IRON PIPE STAMPED "SD 125 13.54R 1989" Elev 457.23
   NAD83 (Ft) NAD27
   N=1,854,702.48 N= 214,258.42
   E=6,327,733.33 E=7,766,326.05
   MONUMENT IS 15' NW OF THE NW CORNER OF THE CONNECTOR BRIDGE FROM NB ROUTE 125 TO EB ROUTE 94 OVER SPRING STREET
2. 64 mm ID (70 mm OD SAMPLER DRIVEN WITH A 63.5 kg HAMMER, FALLING 760 mm.
3. SOILS ARE DESCRIBED ACCORDING TO THE UNIFIED SOIL CLASSIFICATION SYSTEM. ROCK IS DESCRIBED IN TERMS OF ITS PHYSICAL CHARACTERISTICS.

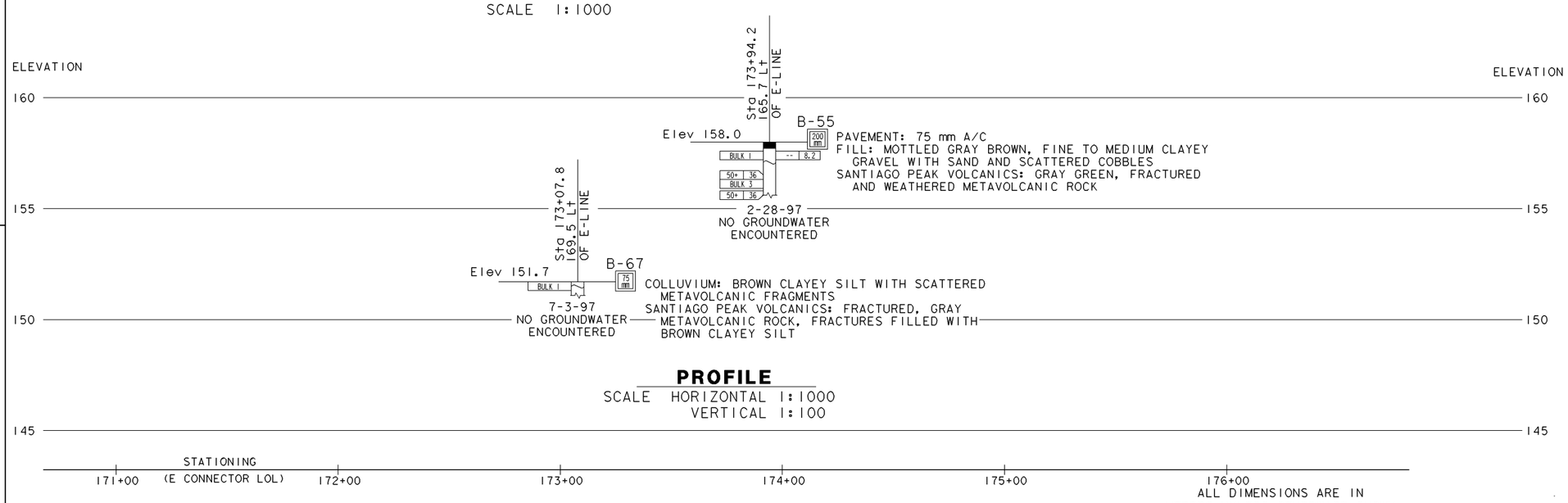

PROFILE

SCALE HORIZONTAL 1:1000
VERTICAL 1:100

ALL DIMENSIONS ARE IN METERS UNLESS OTHERWISE SHOWN

THIS PLAN ACCURATE FOR SOUND WALL WORK ONLY.

SOUND WALL No. 506
LOG OF TEST BORINGS SW-24

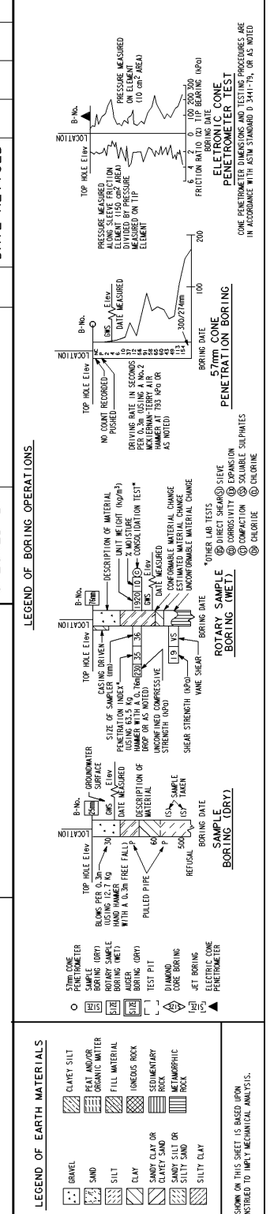

STATE OF CALIFORNIA - DEPARTMENT OF TRANSPORTATION

Caltrans DESIGN

PROJECT ENGINEER

CALCULATED/ DESIGNED BY	DATE	REVISED BY
CHECKED BY		DATE REVISED

LAST REVISION 04-02-01

DATE PLOTTED => 10-APR-2001
TIME PLOTTED => 09:09

FOR REDUCED PLANS ORIGINAL SCALE IS IN MILLIMETERS 0 20 40 60 80

USERNAME => trmikesi
DGN FILE => dpm2_191.dgn

CU 00000 EA 000000

Return to Section 2 Table of Contents

DIST	COUNTY	ROUTE	KILOMETER POST TOTAL PROJECT	SHEET No	TOTAL SHEETS

REGISTERED CIVIL ENGINEER

PLANS APPROVAL DATE

REGISTERED PROFESSIONAL ENGINEER No. Exp. CIVIL STATE OF CALIFORNIA

The State of California or its officers or agents shall not be responsible for the accuracy or completeness of electronic copies of this plan sheet.

Caltrans now has a web site! To get to the web site, go to: http://www.dot.ca.gov

Caltrans Metric

SOUND WALL QUANTITIES

SOUND WALL No.	SOUND WALL (MASONRY BLOCK)	CONCRETE BARRIER (TYPE 27S)	CONCRETE BARRIER (TYPE 27S)	356 mm CIDH CONCRETE PILING (BARRIER)	406 mm CIDH CONCRETE PILING (BARRIER)	SOUND WALL (BARRIER) (MASONRY BLOCK)
	m^2	m	m	m	m	m^2
44	630	62	160	79	370	620
47	1110		105		280	340
55	190					
56	65					
57	700					
58	510					
61	370					
63	730					
64	330					
70	350					
73	510					
78	3090	48	760	79	2270	2950
82	870					
84	760					
85	763		21		11	70
TOTAL	10 978	110	1046	158	2931	3980

This Sound Wall Quantities Sheet does not match the other sound wall sample sheets, but is included as a representative sample summary of sound wall quantities.

SOUND WALL QUANTITIES

SW-55

DATE	REVISED BY	DATE REVISED

CALCULATED/DESIGNED BY

CHECKED BY

PROJECT ENGINEER

STATE OF CALIFORNIA - DEPARTMENT OF TRANSPORTATION

Caltrans DESIGN

LAST REVISION 04-02-01 DATE PLOTTED => 10-APR-2001 TIME PLOTTED => 09:09

FOR REDUCED PLANS ORIGINAL SCALE IS IN MILLIMETERS 0 20 40 60 80

USERNAME => trmikesi
DGN FILE => dpm2_192.dgn

CU 00000 EA 000000

Return to Section 2 Table of Contents

2-2.22 Planting and Irrigation Plans, Details and Quantities

These plans show planting and irrigation layouts, details and quantities.

The manual entitled "Landscape Architecture Standards Manual" and applicable Standard Plans are to be utilized in the preparation of Planting and Irrigation plans. The above-referred manual is available from Caltrans Publication Distribution Unit.

DIST	COUNTY	ROUTE	KILOMETER POST TOTAL PROJECT	SHEET No	TOTAL SHEETS

REGISTERED LANDSCAPE ARCHITECT

PLANS APPROVAL DATE

LICENSED LANDSCAPE ARCHITECT — Signature — Renewal Date — Date — STATE OF CALIFORNIA

The State of California or its officers or agents shall not be responsible for the accuracy or completeness of electronic copies of this plan sheet.

Caltrans now has a web site! To get to the web site, go to: http://www.dot.ca.gov

Caltrans Metric

ABBREVIATIONS

AMEND = AMENDMENT
B & B = BALLED AND BURLAPPED
DIA = DIAMETER
EA = EACH
g = GRAM
kg = KILOGRAM
L = LITER
m = METER
m^2 = SQUARE METER
m^3 = CUBIC METER
ha = HECTARE
Max = MAXIMUM
Min = MINIMUM
mm = MILLIMETER
No. = NUMBER
PLT ESTB = PLANT ESTABLISHMENT
PVMT = PAVEMENT
R/W = RIGHT OF WAY
SF = STATE FURNISHED
TAB = TABLET(S)
TRVD = TRAVELED
BTM = BROWN TRUNK METERS

PLANT LIST AND PLANTING SPECIFICATIONS

PLANT GROUP	PLANT No.	SYMBOL	BOTANICAL NAME	COMMON NAME	SIZE	QUANTITY EACH	HOLE SIZE DIA	HOLE SIZE DEPTH	BASIN TYPE	IRON SULFATE ①	SOIL AMEND	COMMERCIAL FERTILIZER ① PLANTING	COMMERCIAL FERTILIZER ① PLT ESTB	BASIC MULCH (m^3) ①	STAKING	PLANTING LIMITS MINIMUM DISTANCE (m) FROM TRVD WAY	PVMT	FENCE	WALL	PAVED DITCH	EARTH DITCH	ON CENTER (m)	REMARKS
A	1		LANTANA MONTEVIDENSIS	PURPLE TRAILING LANTANA	No. 1	840	②		1	110 g	—	2 TAB	220 g	0.05	—		3					1.5	GROUND COVER
	2		SALIX LASIOLEPIS	ARROYO WILLOW	No. 1	39	②		1	110 g	—	2 TAB	220 g	0.05	—		3	2.5	2.5	2.5	2.5	④	TREE
B	3		ABELIA GRANDIFLORA 'EDWARD GOUCHER'	-	No. 5	118	②		1	110 g	—	3 TAB	220 g	0.05	—		4	3	3	2	2	④	SHRUB
	4		BOUGAINVILLEA 'LA JOLLA'	-	No. 5	97	②		1	110 g	—	3 TAB	220 g	0.05	—		3	2.5	2.5	2.5	2.5	④	SHRUB
	5		CALLISTEMON CITRINUS	BOTTLE BRUSH	No. 5	102	②		1	110 g	—	3 TAB	220 g	0.05	—		3	2.5	2.5	2.5	2.5	④	SHRUB
	6		EUCALYPTUS CLADOCALYX	SUGAR GUM	No. 5	222	②		1	110 g	—	3 TAB	220 g	0.05	⑦	10	8	6	6	3	3	④	TREE
	7		EUCALYPTUS FICIFOLIA	RED-FLOWERING GUM	No. 5	78	②		1	110 g	—	3 TAB	220 g	0.05	⑦	8	6	4	4	3	3	④	TREE
	8		EUCALYPTUS CAMALDULENSIS	RED GUM	No. 5	92	②		1	110 g	—	3 TAB	220 g	0.05	⑦	10	8	6	6	3	3	④	TREE
F	9		DELOSPERMA ALBA	DISNEYLAND ICE PLANT	IN FLATS	128700	—		—	—	—	4 kg/ 100 m^2	3 kg/ 100 m^2	—	—		2	1	1	1	1	0.3	GROUND COVER
	10		PELARGONIUM PELTATUM	IVY GERANIUM	IN FLATS	60400	—		—	—	—	4 kg/ 100 m^2	3 kg/ 100 m^2	—	—		2	1	1	1	1	0.3	GROUND COVER RED OR PINK ③
H	11		CARPOBROTUS EDULIS	HOTTENTOT FIG	CUTTING	773500	—		—	—	—	4 kg/ 100 m^2	3 kg/ 100 m^2	—	—		2	1	1	1	1	0.3	GROUND COVER
K	12		TIPUANA TIPU	TIPU TREE	600 mm BOX	60	②		1	220 g	—	8 TAB	450 g	0.05	⑦	8	6	4	4	3	3	④	TREE
U	13		PLATANUS RACEMOSA	CALIFORNIA SYCAMORE	No. 15	32	②		1	220 g	—	5 TAB	450 g	0.05	⑦	10	8	6	6	3	3	④	TREE
	14		POPULUS FREMONTII	WESTERN COTTONWOOD	No. 15	80	②		1	220 g	—	5 TAB	450 g	0.05	⑦	10	8	6	6	3	3	④	TREE
Z	15		WASHINGONIA ROBUSTA	MEXICAN FAN PALM	PALM TREE	34	②		1	220 g	—	20 TAB	450 g	0.05	—	10	8	6	6	3	3	④	3.6 BTM EACH PALM TREE

APPLICABLE WHEN CIRCLED:

①- QUANTITIES SHOWN ARE "PER PLANT" UNLESS SHOWN AS m^2 APPLICATION RATES.
②- SUFFICIENT TO RECEIVE ROOT BALL.
③- RANDOMLY MIXED, IN GROUPS OF 50. RANDOMLY SPACED GROUPS THROUGHOUT ENTIRE AREA TO BE PLANTED.
④- AS SHOWN ON PLANS.
5 - SEE STANDARD SPECIFICATIONS.
⑥- SEE DETAIL.
⑦- SEE STANDARD DETAIL.

LEGEND:

ESA — ENVIRONMENTALLY SENSITIVE AREA
MULCH (75 mm DEEP)
SEED (TYPE 1)
SEED (TYPE 2)
PREPARE SLOPE
Exist TREES TO REMAIN
Exist TREES AND RUNDO DONAX TO BE REMOVED
REMOVE EXISTING FENCE

NOTE:
UNDERLINED PORTIONS OF BOTANICAL NAME INDICATE ABBREVIATIONS USED ON PLANTING PLANS.

The "HP" sheet identification code shall be used on every sheet of the highway planting portion of highway construction or building construction project, e.g., HP-1, HP-2, etc. When the project consist entirely of planting and irrigation work, use the sheet identification codes shown in Section 2-1.2(D) of this manual.

PLANT LIST

HP-1

STATE OF CALIFORNIA - DEPARTMENT OF TRANSPORTATION
Caltrans LANDSCAPE ARCHITECTURE
PROJECT LANDSCAPE ARCHITECTURE
CALCULATED/ DESIGNED BY | CHECKED BY
DATE | REVISED BY | DATE REVISED

LAST REVISION 04-02-01 | DATE PLOTTED => 10-APR-2001 | TIME PLOTTED => 09:09

FOR REDUCED PLANS ORIGINAL SCALE IS IN MILLIMETERS 0 20 40 60 80

USERNAME => trmikesl
DGN FILE => dpm2_195.dgn

CU 00000 | EA 000000

Return to Section 2 Table of Contents

DIST	COUNTY	ROUTE	KILOMETER POST TOTAL PROJECT	SHEET No	TOTAL SHEETS

LICENSED LANDSCAPE ARCHITECT

PLANS APPROVAL DATE

LICENSED LANDSCAPE ARCHITECT — Signature — Renewal Date — Date — STATE OF CALIFORNIA

The State of California or its officers or agents shall not be responsible for the accuracy or completeness of electronic copies of this plan sheet.

Caltrans now has a web site! To get to the web site, go to: http://www.dot.ca.gov

Caltrans Metric

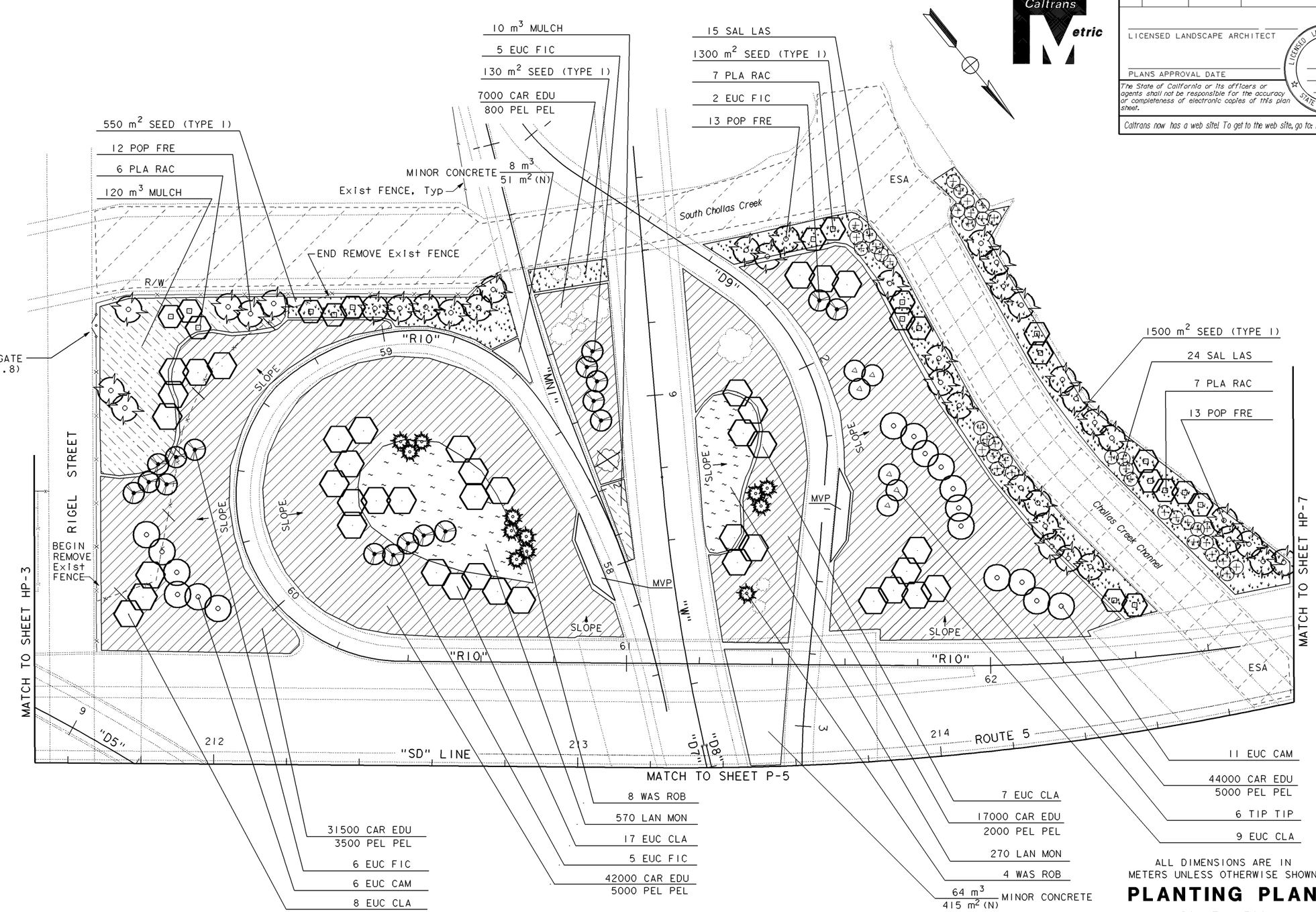

ALL DIMENSIONS ARE IN METERS UNLESS OTHERWISE SHOWN

PLANTING PLAN

SCALE 1:500

THIS PLAN ACCURATE FOR PLANTING WORK ONLY.

HP-4

DATE	REVISED BY	DATE REVISED

CALCULATED/DESIGNED BY

CHECKED BY

PROJECT LANDSCAPE ARCHITECT

STATE OF CALIFORNIA - DEPARTMENT OF TRANSPORTATION

Caltrans LANDSCAPE ARCHITECTURE

LAST REVISION 04-02-01

DATE PLOTTED => 10-APR-2001
TIME PLOTTED => 09:09

FOR REDUCED PLANS ORIGINAL SCALE IS IN MILLIMETERS 0 20 40 60 80

USERNAME => trmikesl
DGN FILE => dpm2_196.dgn

CU 00000 EA 000000

Return to Section 2 Table of Contents

DIST	COUNTY	ROUTE	KILOMETER POST TOTAL PROJECT	SHEET No	TOTAL SHEETS

LICENSED LANDSCAPE ARCHITECT

PLANS APPROVAL DATE

LICENSED LANDSCAPE ARCHITECT — Signature — Renewal Date — Date — STATE OF CALIFORNIA

The State of California or its officers or agents shall not be responsible for the accuracy or completeness of electronic copies of this plan sheet.

Caltrans now has a web site! To get to the web site, go to: http://www.dot.ca.gov

Caltrans Metric

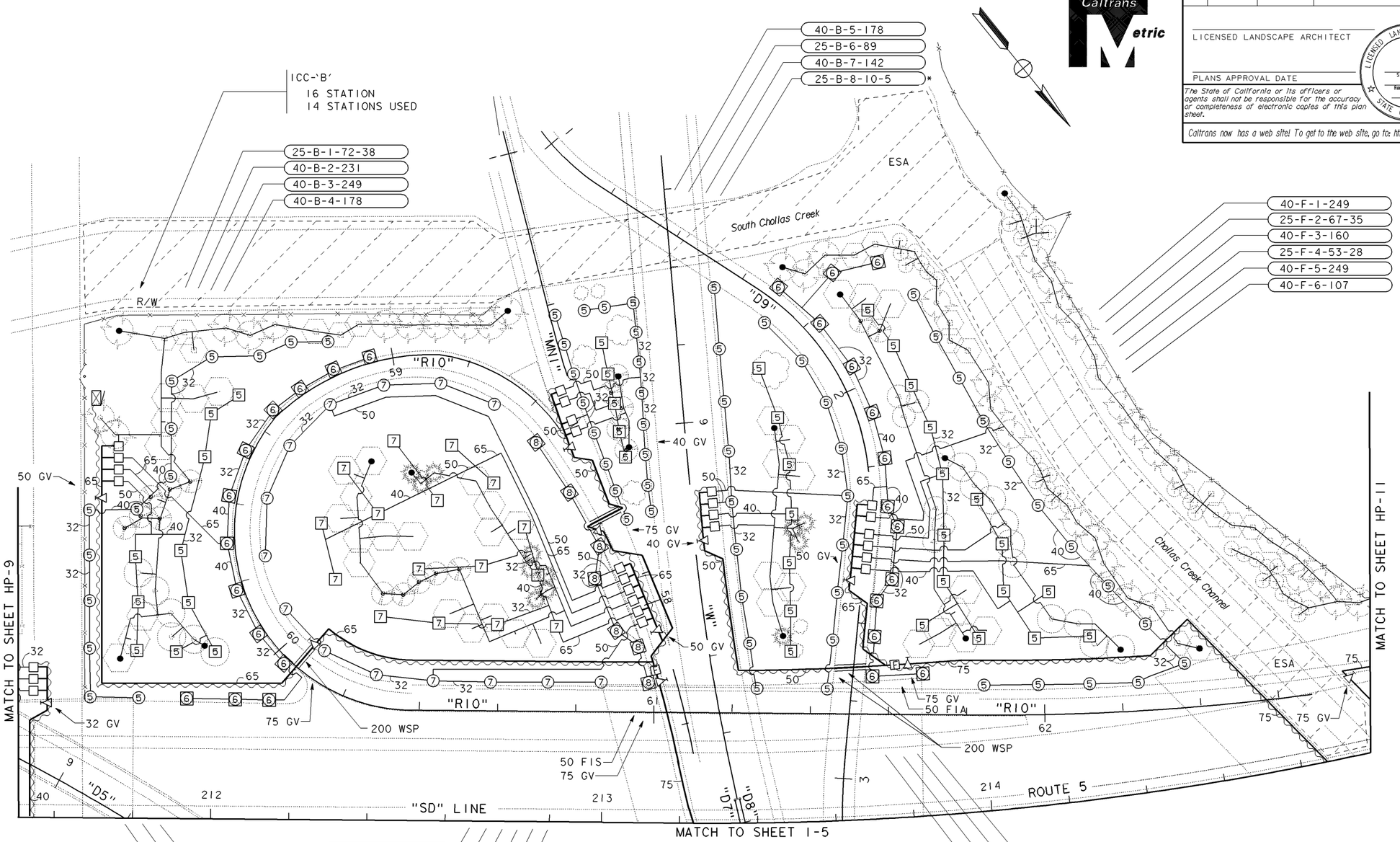

* INSTALL WYE STRAINER FILTER UP STREAM OF VALVE, IN VALVE BOX (SEE DETAIL)

ALL DIMENSIONS ARE IN METERS UNLESS OTHERWISE SHOWN

IRRIGATION PLAN

SCALE 1:500

THIS PLAN ACCURATE FOR IRRIGATION WORK ONLY.

HP-10

DATE	REVISED BY	DATE REVISED

CALCULATED/DESIGNED BY

CHECKED BY

PROJECT LANDSCAPE ARCHITECT

STATE OF CALIFORNIA - DEPARTMENT OF TRANSPORTATION

Caltrans LANDSCAPE ARCHITECTURE

LAST REVISION 04-02-01

DATE PLOTTED => 10-APR-2001
TIME PLOTTED => 09:10

FOR REDUCED PLANS ORIGINAL SCALE IS IN MILLIMETERS 0 20 40 60 80

USERNAME => trmikesl
DGN FILE => dpm2_197.dgn

CU 00000 EA 000000

Return to Section 2 Table of Contents

SPRINKLER SCHEDULE

SYMBOL	TYPE	DESCRIPTION	SPRAY PATTERN	OPERATING PRESSURE (kPa) (KILOPASCAL)	PRESSURE COMPENSATING	PLUS / MINUS 5% ② DISCHARGE: LITERS PER SECOND L/s	LITERS PER MINUTE L/Min	LITERS PER HOUR L/h	RADIUS (IN METERS) (m)	WIDTH x LENGTH (IN METERS) (m)	MATERIAL	NOZZLE SIZE IN MILLIMETERS (mm)	INLET CONNECTION (NPT) (DN IN MILLIMETERS) (mm)	POSITIVE-LOCKING ADJ ARC STOP	BACKSPLASH PREVENTER	DIFFUSER PIN	DISTANCE CONTROL FLAP	ADJ DISCHARGE	RISER: TYPE	RISER MATERIAL: PLASTIC	RISER MATERIAL: GALVANIZED	RISER SIZE (IPS) (IN MILLIMETERS) (mm)	RISER HEIGHT (IN MILLIMETERS) (mm)	SWING JOINT (TYPE)	RISER SUPPORT	SPRINKLER PROTECTOR (TYPE)	REMARKS
[5]	A-5	GEAR DRIVEN	F	345	-	-	17.8	-	12.2	-	PL	-	20	-	-	X	-	-	I	-	X	20	150	I	-	-	
⑤	A-5	GEAR DRIVEN	P	345	-	-	17.8	-	12.2	-	PL	-	20	-	-	X	-	-	IV	-	X	20	150	I	-	-	⑦
⑥	A-6	GEAR DRIVEN	P	345	-	-	17.8	-	12.2	-	PL	-	20	-	-	X	-	-	VI	-	-	-	-	-	-	I	③ ⑦ 100 mm POP-UP
[7]	A-7	GEAR DRIVEN	F	345	-	-	30.2	-	14.6	-	PL	-	20	-	-	X	-	-	I	-	X	20	150	I	-	-	
⑦	A-7	GEAR DRIVEN	P	345	-	-	30.2	-	14.6	-	PL	-	20	-	-	X	-	-	IV	-	X	20	150	I	-	-	⑦
⑧	A-8	GEAR DRIVEN	P	345	-	-	30.2	-	14.6	-	PL	-	20	-	-	X	-	-	VI	X	-	-	-	-	-	I	③ ⑦ 100 mm POP-UP
[11]	A-11	GEAR DRIVEN	F	345	-	-	6.8	-	7.6	-	PL	-	20	-	-	-	-	-	I	-	X	20	150	I	-	-	
⑪	A-11	GEAR DRIVEN	P	345	-	-	6.8	-	7.6	-	PL	-	20	-	-	-	-	-	I	-	X	20	150	I	-	-	⑦
△	B-1	SHRUB SPRAY	F	207	-	-	14.0	-	4.5	-	PL	-	15	-	-	-	-	-	I	X	-	15	300	I	-	-	⑧
△	B-1	SHRUB SPRAY	H	207	-	-	7.0	-	4.5	-	PL	-	15	-	-	-	-	-	I	X	-	15	300	I	-	-	⑧
△	B-1	SHRUB SPRAY	Q	207	-	-	3.5	-	4.5	-	PL	-	15	-	-	-	-	-	I	X	-	15	300	I	-	-	⑧
●	C-2	FLOOD BUBBLER	-	207	X	-	1.9	-	-	-	PL	-	15	-	-	-	-	-	V	X	-	15	-	-	-	-	⑨ ONE SPRINKLER HEAD EACH TREE OR SHRUB

X IN BOX DENOTES REQUIREMENT

APPLICABLE WHEN CIRCLED BELOW:

1 - SEE SPECIAL PROVISIONS.

②- IF A PRESSURE COMPENSATING DEVISE IS SPECIFIED, THE DISCHARGE AND RADII SHOWN REFLECT ITS USE.

③- SHALL HAVE AN INTERNAL CHECK VALVE.

4 - VINYL-COATED CAST IRON HOUSING.

5 - SWING JOINTS REQUIRED ADJACENT TO SHOULDERS, CURBS, SIDEWALKS AND DIKES.

6 - UNLESS OTHERWISE SHOWN ON PLANS.

⑦- ADJUSTABLE ARC.

⑧- MATCHED PRECIPITATION RATE NOZZLES.

⑨- NON-ADJUSTABLE DISCHARGE RATE.

STANDARD NOTES

ADD ADDITIONAL NOTES AS NECESSARY

ABBREVIATIONS

ADJ —— ADJUSTABLE
B/B —— BRASS/BRONZE
B/B/PL —— BRASS/BRONZE/PLASTIC
B/PL —— BRASS/PLASTIC
CST —— CENTER STRIP
DN —— DIAMETER NOMINAL
EST —— END STRIP
F —— FULL CIRCLE
F/P —— FULL/PART CIRCLE
H —— HALF CIRCLE
IPS —— IRON PIPE SIZE
kPa —— KILOPASCAL
L/h —— LITERS PER HOUR
L/min —— LITERS PER MINUTE
L/s —— LITERS PER SECOND
m —— METERS
mm —— MILLIMETERS
NPT —— NATIONAL PIPE THREAD
P —— PART CIRCLE
PL —— PLASTIC
Q —— QUARTER CIRCLE
SST —— SIDE STRIP
T —— THIRD CIRCLE
TQ —— THREE QUARTER CIRCLE
TT —— TWO THIRDS CIRCLE

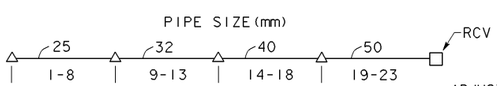

NUMBER OF HALF HEADS
(2 HALF HEADS=1 FULL HEAD)

PIPE SIZING CHART
TYPE B-1 SPRINKLERS

- ADJUSTABLE ARC.
- MATCHED PRECIPITATION RATE NOZZLES.
- NON-ADJUSTABLE DISCHARGE RATE.

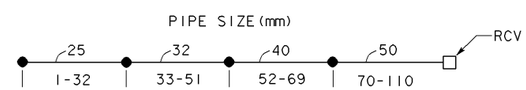

NUMBER OF HEADS

PIPE SIZING CHART
C-2 Mod SPRINKLERS

NOTE:

1. ALL LATERAL PIPE NOT LABELED SHALL BE 25 mm, OR AS SHOWN ON PIPE SIZING CHARTS.

2. ALL SPRINKLER HEADS, VALVES AND MAINLINE SHOWN NEAR MVP LOCATIONS ARE TO BE INSTALLED OUTSIDE OF THE PAVED MVP AREA. VALVES TO BE INSTALLED AT EXITING END OF THE MVP.

Caltrans Metric

DIST	COUNTY	ROUTE	KILOMETER POST TOTAL PROJECT	SHEET No	TOTAL SHEETS

LICENSED LANDSCAPE ARCHITECT

PLANS APPROVAL DATE

LICENSED LANDSCAPE ARCHITECT — Signature — Renewal Date — Date — STATE OF CALIFORNIA

The State of California or its officers or agents shall not be responsible for the accuracy or completeness of electronic copies of this plan sheet.

Caltrans now has a web site! To get to the web site, go to: http://www.dot.ca.gov

ALL DIMENSIONS ARE IN METERS UNLESS OTHERWISE SHOWN

SPRINKLER SCHEDULE AND DETAILS

HP-13

DATE	REVISED BY	DATE REVISED

CALCULATED/DESIGNED BY

CHECKED BY

PROJECT LANDSCAPE ARCHITECT

STATE OF CALIFORNIA - DEPARTMENT OF TRANSPORTATION

Caltrans LANDSCAPE ARCHITECTURE

LAST REVISION 04-02-01

DATE PLOTTED => 10-APR-2001
TIME PLOTTED => 09:10

FOR REDUCED PLANS ORIGINAL SCALE IS IN MILLIMETERS 0 20 40 60 80

USERNAME => trmikesl
DGN FILE => dpm2_198.dgn

CU 00000 EA 000000

Return to Section 2 Table of Contents

DIST	COUNTY	ROUTE	KILOMETER POST TOTAL PROJECT	SHEET No	TOTAL SHEETS

LICENSED LANDSCAPE ARCHITECT

PLANS APPROVAL DATE

LICENSED LANDSCAPE ARCHITECT — Signature — Renewal Date — Date — STATE OF CALIFORNIA

The State of California or its officers or agents shall not be responsible for the accuracy or completeness of electronic copies of this plan sheet.

Caltrans now has a web site! To get to the web site, go to: http://www.dot.ca.gov

Caltrans Metric

ABBREVIATIONS

EA - EACH
DIP - DUCTILE IRON PIPE
GSP - GALVANIZED STEEL PIPE
m - METER
mm - MILLIMETER
PR - PRESSURE RATED

SUBTOTALS PER VALVE ON LATERAL SUPPLY SIDE OF CONTROL VALVE

DESCRIPTION			UNIT	VALVE OR ASSEMBLY NUMBER F-1	F-2	F-3	F-4	F-5	F-6	F-7	F-8	F-9	F-10	F-11	F-12	F-13	F-14	F-15	F-16	SUBTOTALS	UNIT	DESCRIPTION		
PLASTIC PIPE SUPPLY LINE	PR 200	20 mm	m	—	585	700	780	420	505	565	615	770	665	475	365	660	665	490	765	9025	m	20 mm	PR 200	PLASTIC PIPE SUPPLY LINE
		25 mm	m	—	110	280	5	75	260	60	70	110	50	25	30	50	15	80	170	1390	m	25 mm		
		32 mm	m	—	100	115	5	—	5	10	—	—	5	15	135	145	5	45	85	670	m	32 mm		
		40 mm	m	—	10	100	30	10	10	15	20	15	20	40	90	10	20	40	10	440	m	40 mm		
	PR 315																						PR 315	
GSP																							GSP	
DIP																							DIP	
SPRINKLER TYPE		TYPE C	EA	—	150	185	166	117	116	132	131	149	150	150	139	109	137	144	165	2140	EA	TYPE C		SPRINKLER TYPE

DESCRIPTION		UNIT	VALVE OR ASSEMBLY NUMBER	SUBTOTALS	UNIT	DESCRIPTION		
PLASTIC PIPE SUPPLY LINE	PR 200						PR 200	PLASTIC PIPE SUPPLY LINE
	PR 315						PR 315	
GSP							GSP	
DIP							DIP	
SPRINKLER TYPE								SPRINKLER TYPE

IRRIGATION QUANTITIES

HP-21

STATE OF CALIFORNIA - DEPARTMENT OF TRANSPORTATION
Caltrans LANDSCAPE ARCHITECTURE

PROJECT LANDSCAPE ARCHITECT

CALCULATED/DESIGNED BY | CHECKED BY

DATE | REVISED BY | DATE REVISED

LAST REVISION 04-02-01 | DATE PLOTTED => 10-APR-2001 | TIME PLOTTED => 09:10

FOR REDUCED PLANS ORIGINAL SCALE IS IN MILLIMETERS 0 20 40 60 80

USERNAME => trmikesl
DGN FILE => dpm2_199.dgn

CU 00000 | EA 000000

Return to Section 2 Table of Contents

SUBTOTALS PER PLAN SHEET ON MAIN SUPPLY SIDE OF CONTROL VALVE

DESCRIPTION			UNIT	SHEET NUMBER HP-14	HP-15	HP-16	HP-17	SUBTOTALS
BPA		50 mm	EA	—	—	—	1	1
BPA		ENCLOSURE						
BOOSTER PUMP								
IRRIGATION CONTROLLER		18 STATION	EA	—	—	—	1	1
IRRIGATION CONTROLLER		STATION						
IRRIGATION CONTROLLER		STATION						
IRRIGATION CONTROLLER	CEC	SINGLE	EA	—	—	—	1	1
IRRIGATION CONTROLLER	CEC	DOUBLE						
VALVES AND ASSEMBLIES	RCV	40 mm	EA	4	5	3	3	15
VALVES AND ASSEMBLIES	RCV	50 mm	EA	—	—	—	1	1
VALVES AND ASSEMBLIES	GV	50 mm	EA	—	3	1	—	4
VALVES AND ASSEMBLIES	GV	65 mm	EA	1	—	—	1	2
VALVES AND ASSEMBLIES	QCV	20 mm	EA	8	8	6	7	29
VALVES AND ASSEMBLIES	FV	50 mm	EA	—	—	—	1	1
VALVES AND ASSEMBLIES	FAU	40 mm	EA	4	5	3	4	16
CONDUIT	CSP							
CONDUIT	WSP							
PLASTIC PIPE SUPPLY LINE	PR 200	20 mm						
PLASTIC PIPE SUPPLY LINE	PR 200	25 mm						
PLASTIC PIPE SUPPLY LINE	PR 200	32 mm						
PLASTIC PIPE SUPPLY LINE	PR 200	40 mm	m	210	55	30	30	325
PLASTIC PIPE SUPPLY LINE	PR 200	50 mm	m	45	255	40	—	340
PLASTIC PIPE SUPPLY LINE	PR 200	65 mm	m	285	—	—	480	765
PLASTIC PIPE SUPPLY LINE	PR 315							
GSP								
DIP								

TOTAL QUANTITIES

TOTALS	UNIT	DESCRIPTION		
1	EA	50 mm		BPA
		ENCLOSURE		BPA
		BOOSTER PUMP		
1	EA	18 STATION		IRRIGATION CONTROLLER
		STATION		IRRIGATION CONTROLLER
		STATION		IRRIGATION CONTROLLER
1	EA	SINGLE	CEC	IRRIGATION CONTROLLER
		DOUBLE	CEC	IRRIGATION CONTROLLER
15	EA	40 mm	RCV	VALVES AND ASSEMBLIES
1	EA	50 mm	RCV	VALVES AND ASSEMBLIES
4	EA	50 mm	GV	VALVES AND ASSEMBLIES
2	EA	65 mm	GV	VALVES AND ASSEMBLIES
29	EA	20 mm	QCV	VALVES AND ASSEMBLIES
1	EA	50 mm	FV	VALVES AND ASSEMBLIES
16	EA	40 mm	FAU	VALVES AND ASSEMBLIES
			CSP	CONDUIT
			WSP	CONDUIT
9025	m	20 mm	PR 200	PLASTIC PIPE SUPPLY LINE
1390	m	25 mm	PR 200	PLASTIC PIPE SUPPLY LINE
670	m	32 mm	PR 200	PLASTIC PIPE SUPPLY LINE
765	m	40 mm	PR 200	PLASTIC PIPE SUPPLY LINE
340	m	50 mm	PR 200	PLASTIC PIPE SUPPLY LINE
765	m	65 mm	PR 200	PLASTIC PIPE SUPPLY LINE
			PR 315	PLASTIC PIPE SUPPLY LINE
				GSP
				DIP
2140	EA	TYPE C		SPRINKLER TYPE

ABBREVIATIONS

BPA - BACKFLOW PREVENTER ASSEMBLY
BV - BALL VALVE
CV - CHECK VALVE
CEC - CONTROLLER ENCLOSURE CABINET
CSP - CORRUGATED STEEL PIPE
DIP - DUCTILE IRON PIPE
EA - EACH
FAU - FILTER ASSEMBLY UNIT
FCV - FLOW CONTROL VALVE
FS - FLOW SENSOR
GSP - FLUSH VALVE
GV - GALVANIZED STEEL PIPE
MCV - GATE VALVE
m - MANUAL CONTROL VALVE
mm - METER
- MILLIMETER
PR - PRESSURE RATED
PRV - PRESSURE REDUCING VALVE
PRLV - PRESSURE RELIEF VALVE
QCV - QUICK COUPLING VALVE
RCV - REMOTE CONTROL VALVE
RCVM - REMOTE CONTROL VALVE (MASTER)
VAU - VALVE ASSEMBLY UNIT
WSP - WELDED STEEL PIPE
WS - WYE STRAINER

Caltrans Metric

DIST	COUNTY	ROUTE	KILOMETER POST TOTAL PROJECT	SHEET No	TOTAL SHEETS

LICENSED LANDSCAPE ARCHITECT

PLANS APPROVAL DATE

LICENSED LANDSCAPE ARCHITECT — Signature — Renewal Date — Date — STATE OF CALIFORNIA

The State of California or its officers or agents shall not be responsible for the accuracy or completeness of electronic copies of this plan sheet.

Caltrans now has a web site! To get to the web site, go to: http://www.dot.ca.gov

STATE OF CALIFORNIA - DEPARTMENT OF TRANSPORTATION
Caltrans LANDSCAPE ARCHITECTURE

PROJECT LANDSCAPE ARCHITECT
CALCULATED/DESIGNED BY
CHECKED BY
DATE REVISED BY
DATE REVISED

IRRIGATION QUANTITIES

HP-22

LAST REVISION 04-02-01
DATE PLOTTED => 10-APR-2001
TIME PLOTTED => 09:10

FOR REDUCED PLANS ORIGINAL SCALE IS IN MILLIMETERS 0 20 40 60 80

USERNAME => trmikesl
DGN FILE => dpm2_200.dgn

CU 00000 EA 000000

Return to Section 2 Table of Contents

2-2.23 Signal, Lighting, and Electrical System Plans and Details

(1) General

Signal, Lighting and Electrical System work is work that is normally covered under Section 86 of the Standard Specifications and the "ES" series of Standard Plans. The addition of work not covered in these areas, such as signs covered elsewhere, should be avoided. If shown, the work should be properly referenced for payment.

Structure lighting plans are generally prepared from dropouts of the General Plan of the structure involved, with non-pertinent details and notes removed.

Caltrans symbols and abbreviations as shown on Standard Plans ES-1A, ES-1B, A10A, and A10B are to be used to prepare these plan sheets.

Because Signal, Lighting, and Electrical System work is usually paid for on a lump sum basis, plan sheet names should match the bid items for the work shown. It is desirable that plan sheets should show the work of only one bid item. Plan sheets that show the work of more than one lump sum, unit or combination bid items must clearly define the pay items for each portion of work, and the plan sheet name will include each item. Bidders must be able to identify all work with its associated bid item.

(2) Plan Sheet Names

Plan sheet names for Signal, Lighting and Electrical System plans shall conform to, but not be limited to, the following:

- SIGNAL AND LIGHTING
- LIGHTING
- SIGN ILLUMINATION
- LIGHTING AND SIGN ILLUMINATION
- CHANGEABLE MESSAGE SIGN SYSTEM
- EXTINGUISHABLE MESSAGE SIGN SYSTEM
- FLASHING BEACON
- RAMP METERING SYSTEM
- TRAFFIC MONITORING STATION
- INTERCONNECTION SYSTEM
- COMMUNICATION CONDUIT
- ELECTRIC SERVICE (IRRIGATION)

Modifiers are not needed unless their use helps in understanding the work; and they also are included in the respective bid item. Modifiers may be used when appropriate.

Location 1, Temporary, City, Remove, Detour, etc., are examples of modifiers which may be used.

Modifiers should be placed in parentheses at the right or below the main plan name.

Sheet identification codes are E-1, E-2, etc. The only other information to be shown at the lower right corner of the sheet is the modifier, such as, location number of work, if involved, and street names of intersections at signal installations.

(3) Standard Drawings from Other Agencies.

Standard drawings of other agencies, when applicable to the project, shall be included as part of the project plans. Reference only to the standard drawing number is not acceptable.

Standard drawings from other agencies can normally be incorporated on project plan sheets, and such plan sheets shall have the signature, date signed and seal of the lowest classification licensed person in responsible charge for preparation of the plans. Generally, the project engineer will sign these sheets. Quality of such incorporated standard drawings must be such that plans will be legible when reduced.

Return to Section 2 Table of Contents, page 2-17

(4) Notes

Notes should be brief and direct. Detailed word descriptions belong in the special provisions.

Notes should be located on or before the first plan sheets that they apply to.

General notes applicable to the project are either not numbered or, if numbered, they are not enclosed in a square. Project notes that are specific for one or more locations shall be numbered and enclosed with a square to match the designation shown at the plan work locations; Example: 1. Equipment or material designations are drawn inside circles: Example: A.

Non-standard legends and abbreviations should not be mixed with the project notes, but it is desirable that they be on the same plan sheet.

Each sheet of the Signal, Lighting and Electrical System Plans shall have the following note included on them: "This plan accurate for Electrical work only."

Notes

Return to Section 2 Table of Contents, page 2-17

DIST	COUNTY	ROUTE	KILOMETER POST TOTAL PROJECT	SHEET No	TOTAL SHEETS

REGISTERED ELECTRICAL ENGINEER

PLANS APPROVAL DATE

REGISTERED PROFESSIONAL ENGINEER No. Exp. ELECTRICAL STATE OF CALIFORNIA

The State of California or its officers or agents shall not be responsible for the accuracy or completeness of electronic copies of this plan sheet.

Caltrans now has a web site! To get to the web site, go to: http://www.dot.ca.gov

Caltrans Metric

NOTE:

FOR NOTES AND SCHEDULES SEE SHEET E-2.

ABBREVIATIONS

TOS - TRAFFIC OPERATION SYSTEM

LEGEND

CITY LIGHTING STANDARD

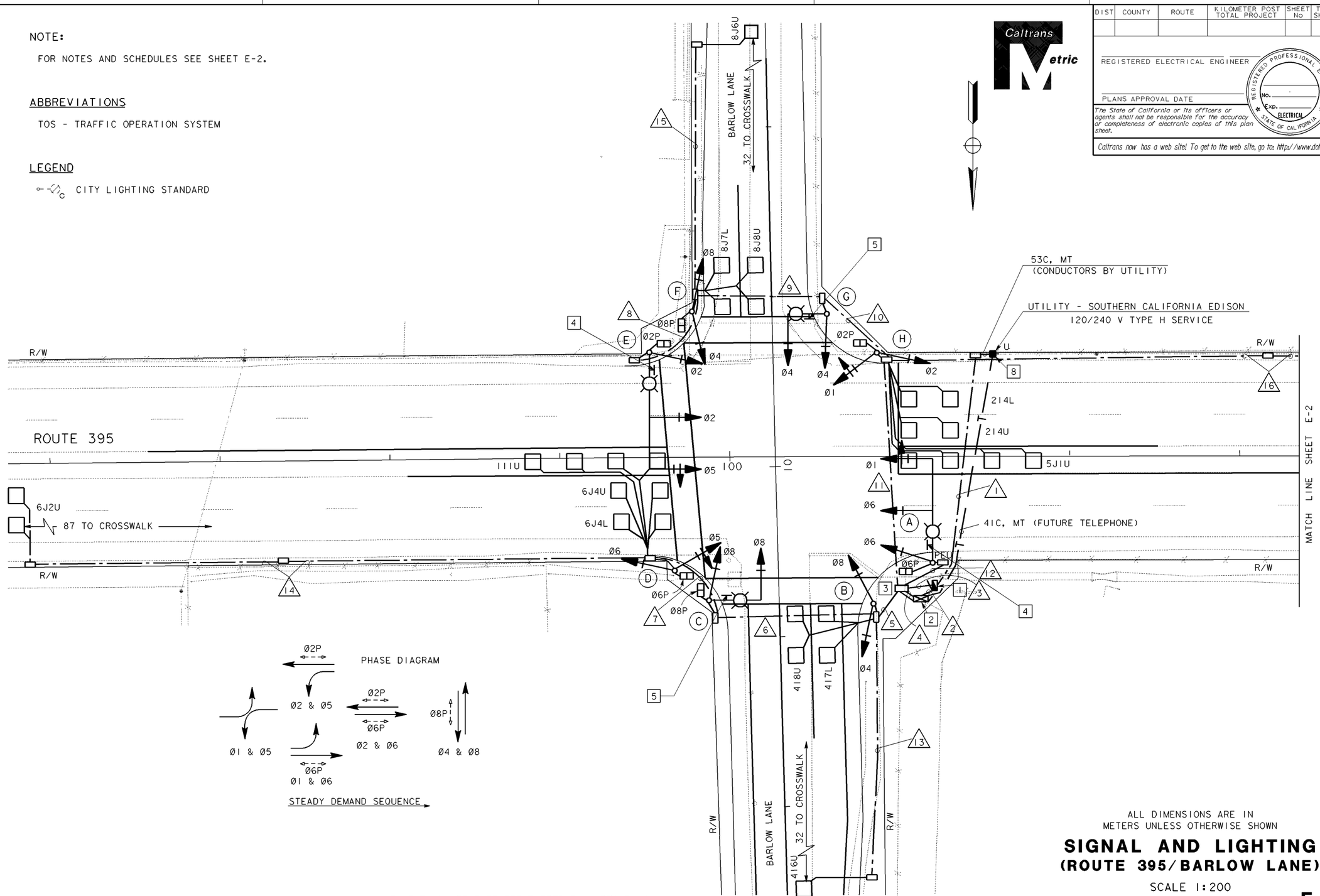

ALL DIMENSIONS ARE IN METERS UNLESS OTHERWISE SHOWN

SIGNAL AND LIGHTING
(ROUTE 395/BARLOW LANE)

SCALE 1:200

E-1

THIS PLAN ACCURATE FOR ELECTRICAL WORK ONLY.

DATE	REVISED BY	DATE REVISED

CALCULATED/DESIGNED BY

CHECKED BY

PROJECT ENGINEER

STATE OF CALIFORNIA - DEPARTMENT OF TRANSPORTATION

Caltrans DESIGN

LAST REVISION 04-02-01

DATE PLOTTED => 10-APR-2001
TIME PLOTTED => 09:10

FOR REDUCED PLANS ORIGINAL SCALE IS IN MILLIMETERS 0 20 40 60 80

USERNAME => trmikesl
DGN FILE => dpm2_203.dgn

CU 00000 EA 000000

Return to Section 2 Table of Contents

DIST	COUNTY	ROUTE	KILOMETER POST TOTAL PROJECT	SHEET No	TOTAL SHEETS

REGISTERED ELECTRICAL ENGINEER

PLANS APPROVAL DATE

REGISTERED PROFESSIONAL ENGINEER No. Exp. ELECTRICAL STATE OF CALIFORNIA

The State of California or its officers or agents shall not be responsible for the accuracy or completeness of electronic copies of this plan sheet.

Caltrans now has a web site! To get to the web site, go to: http://www.dot.ca.gov

Caltrans Metric

CONDUIT AND CONDUCTOR SCHEDULE

CABLE SCHEDULE			CONDUIT RUN NUMBER AND SIZE																
CABLE TYPE	SLD	PHASE	1	2	3	4	5	6	7	8	9	10	11	12	13	14	15	16	17
			53C	41C	41C	2-78C	78C	78C	78C	78C	78C	78C	78C	78C	41C	41C	41C	41C	41C
VEH-PED 12CSC	(A)	1,6,6P				1								1					
	(B)	4,8	6			2 1	2 1												
	(C)	8,8P	6			1 1	1 1	1 1											
	(D)	5,6,6P	8			1 1	1 1	1 1	1 1										
PPB 3CSC	(E)	2,5,2P	8			1 1				1 1	1 1	1 1	1 1						
	(F)	4,8,8P	2			2 1					2 1	2 1	2 1						
	(G)	4	2			1 1						1 1	1 1						
	(H)	1,2,2P				1							1						
		TOTAL				10 6	4 3	2 2	1 1	1 1	3 2	4 3	5 3	1					
AWG		CIRCUIT																	
#2		SERVICE	3																
#4		SIGNAL		2															
#8		LIGHTING			2		2	2		2	2	2	2	2					
#8		FLASHING BEACONS			2								2					2	2
#14		PEU			3									3					
LOOP DLC																			
PHASE																			
Ø1						1	1	1	1										
Ø2						3							3					1	
Ø4						3	3								1				
Ø5						1							1						
Ø6						3	3	3	3							1			
Ø8						3					3	3	3				1		
		TOTAL	3	2	7	30	16	10	6	4	10	12	19	6	1	1	1	3	2

1. 120/240 V TYPE III-BF SERVICE EQUIPMENT ENCLOSURE. FURNISH WITH 4P, 100 A MAIN CB AND THE FOLLOWING CIRCUITS BREAKERS:

No.	AMPERES	VOLTS	POLES	LOAD	METER	PHOTOELECTRIC CONTROL TYPE
1	70	120	1	TRAFFIC SIGNAL	YES	——
2	40	240	2	HIGHWAY LIGHTING	NO	——
3	15	120	1	FLASHING BEACON	YES	——
4	15	120	1	LIGHTING CONTROL	YES	II

2. STATE-FURNISHED MODEL 170 CONTROLLER ASSEMBLY WITH TYPE 332 CABINET.
3. No. 6 PULL BOX WITH EXTENSION.
4. INSTALL STREET NAME SIGN ON SIGNAL MAST ARM - "BARLOW LANE".
5. INSTALL STREET NAME SIGN ON SIGNAL MAST ARM - "HIGHWAY 395".
6. INSTALL POLE TOP PHOTOELECTRIC CONTROL UNIT.
7. INSTALL W41 SIGN AND SIGN LIGHTING FIXTURE.
8. TERMINATE TELEPHONE CONDUIT 300 mm ABOVE FINISHED GRADE.

POLE AND EQUIPMENT SCHEDULE

	STANDARD			Veh Sig Mtg		Ped Sig Mtg	PPB		HPS Lum	SPECIAL REQUIREMENTS
No.	TYPE	SMA (m)	LMA (m)	MAST ARM (m)	POLE		Ø	ARROW		
(A)	26-3-129	12.2	3.7	MAT-12.2 MAS-6.1	SV-1-T	SP-1-T			200 W	4 6
(B)	1-A				TV-2-T		6	→		
(C)	17-2-129	6.1	3.7	MAS	SV-1-T	SP-1-T	6	←	200 W	5
(D)	1-A				TV-2-T	SP-1-T	8	→		
(E)	26-3-129	13.7	3.7	MAT-13.7 MAS-7.6	SV-1-T	SP-1-T	8	←	200 W	4
(F)	1-A				TV-2-T	SP-1-T	2	→		
(G)	17-2-129	4.6	3.7	MAS	SV-1-T		2	←	200 W	5
(H)	1-A				TV-2-T	SP-1-T				
(I)	9B									7

ALL SIGNAL SECTIONS SHALL BE 300 mm.

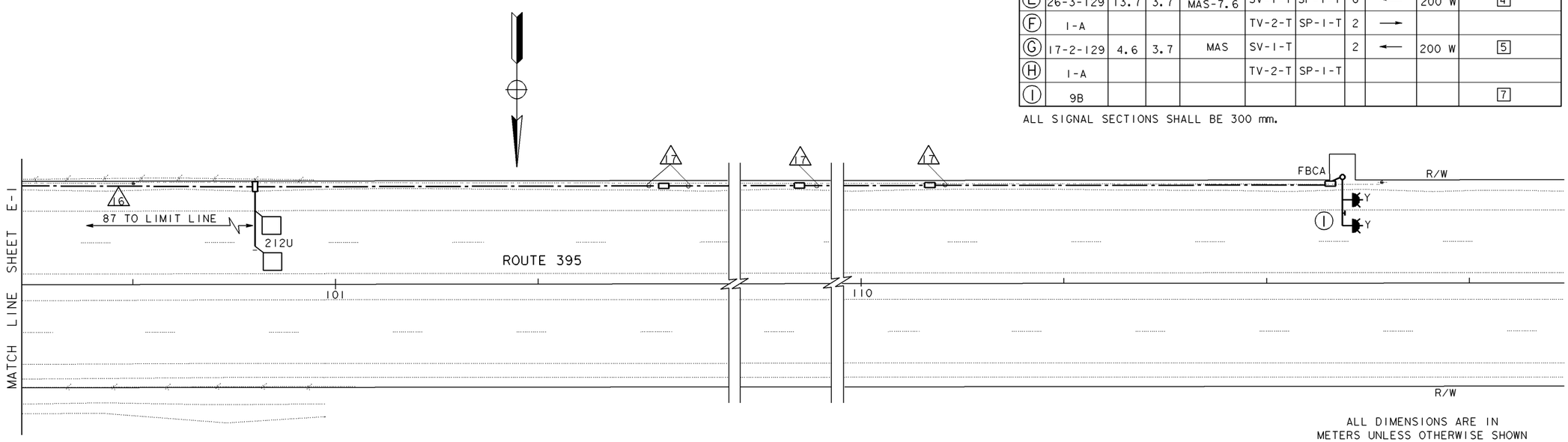

ALL DIMENSIONS ARE IN METERS UNLESS OTHERWISE SHOWN

NOTE:
ALL PULL BOXES SHALL BE No. 5 WITH EXTENSION UNLESS OTHERWISE NOTED.

SIGNAL AND LIGHTING
(ROUTE 395/BARLOW LANE)

SCALE 1:200

E-2

THIS PLAN ACCURATE FOR ELECTRICAL WORK ONLY.

STATE OF CALIFORNIA - DEPARTMENT OF TRANSPORTATION
Caltrans DESIGN

PROJECT ENGINEER | REVISED BY | DATE REVISED | CALCULATED/DESIGNED BY | CHECKED BY | DATE

LAST REVISION 04-02-01 | DATE PLOTTED => 10-APR-2001 | TIME PLOTTED => 09:10

FOR REDUCED PLANS ORIGINAL SCALE IS IN MILLIMETERS 0 20 40 60 80

USERNAME => trmikesi
DGN FILE => dpm2_204.dgn

CU 00000 | EA 000000

Return to Section 2 Table of Contents

DIST	COUNTY	ROUTE	KILOMETER POST TOTAL PROJECT	SHEET No	TOTAL SHEETS

REGISTERED ELECTRICAL ENGINEER

PLANS APPROVAL DATE

REGISTERED PROFESSIONAL ENGINEER No. Exp. ELECTRICAL STATE OF CALIFORNIA

The State of California or its officers or agents shall not be responsible for the accuracy or completeness of electronic copies of this plan sheet.

Caltrans now has a web site! To get to the web site, go to: http://www.dot.ca.gov

Caltrans Metric

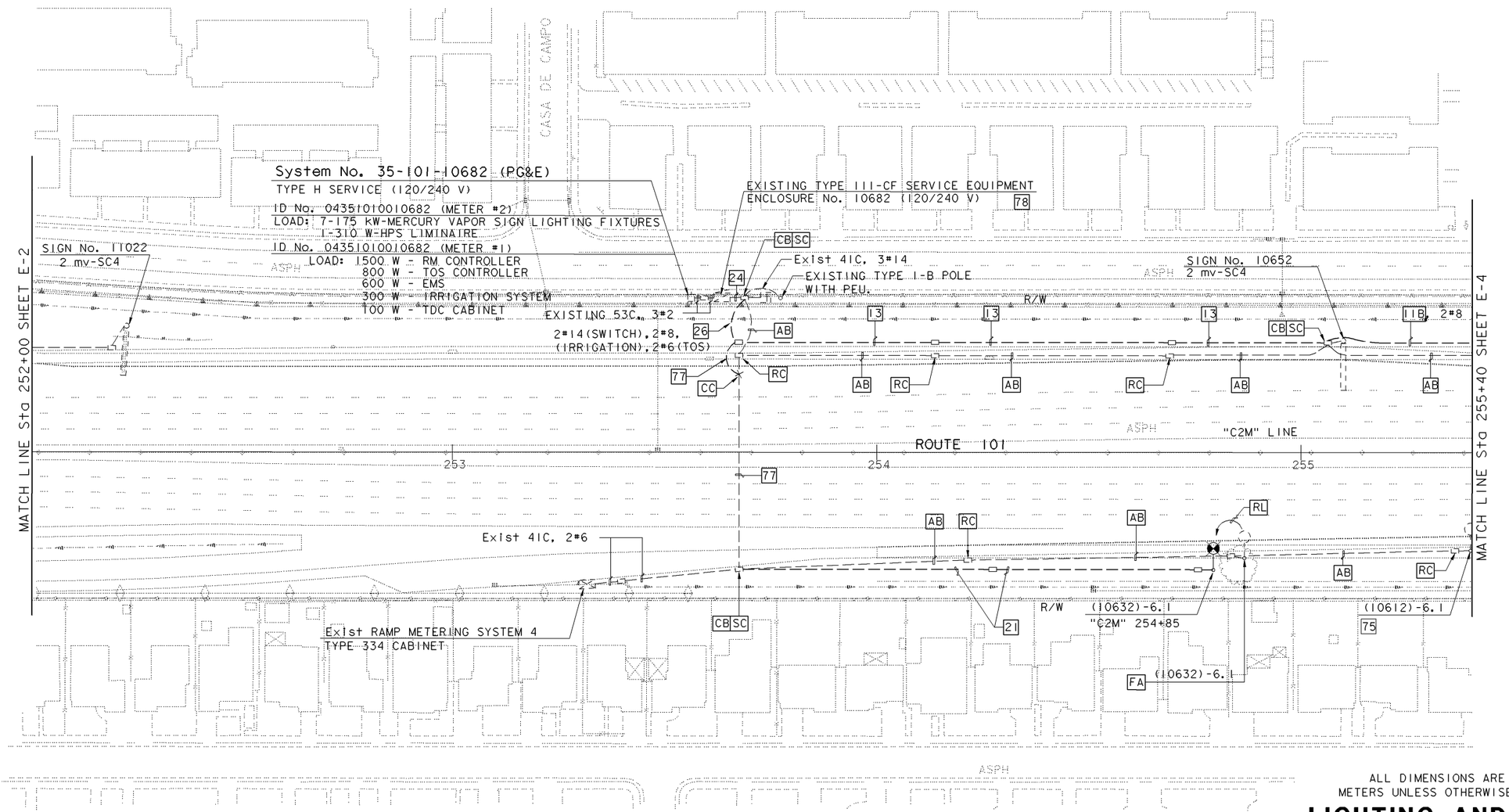

ALL DIMENSIONS ARE IN METERS UNLESS OTHERWISE SHOWN

LIGHTING AND SIGN ILLUMINATION

SCALE 1:500

E-3

THIS PLAN ACCURATE FOR ELECTRICAL WORK ONLY.

DATE	REVISED BY	DATE REVISED

CALCULATED/DESIGNED BY

CHECKED BY

PROJECT ENGINEER

STATE OF CALIFORNIA - DEPARTMENT OF TRANSPORTATION

Caltrans DESIGN

FOR REDUCED PLANS ORIGINAL SCALE IS IN MILLIMETERS 0 20 40 60 80

USERNAME => trmikesl
DGN FILE => dpm2_205.dgn

CU 00000 EA 000000

LAST REVISION 04-02-01

DATE PLOTTED => 10-APR-2001
TIME PLOTTED => 09:10

Return to Section 2 Table of Contents

DIST	COUNTY	ROUTE	KILOMETER POST TOTAL PROJECT	SHEET No	TOTAL SHEETS

REGISTERED ELECTRICAL ENGINEER

PLANS APPROVAL DATE

REGISTERED PROFESSIONAL ENGINEER NO. EXP. ELECTRICAL STATE OF CALIFORNIA

The State of California or its officers or agents shall not be responsible for the accuracy or completeness of electronic copies of this plan sheet.

Caltrans now has a web site! To get to the web site, go to: http://www.dot.ca.gov

Caltrans Metric

LEGEND:

CITY LIGHTING STANDARD

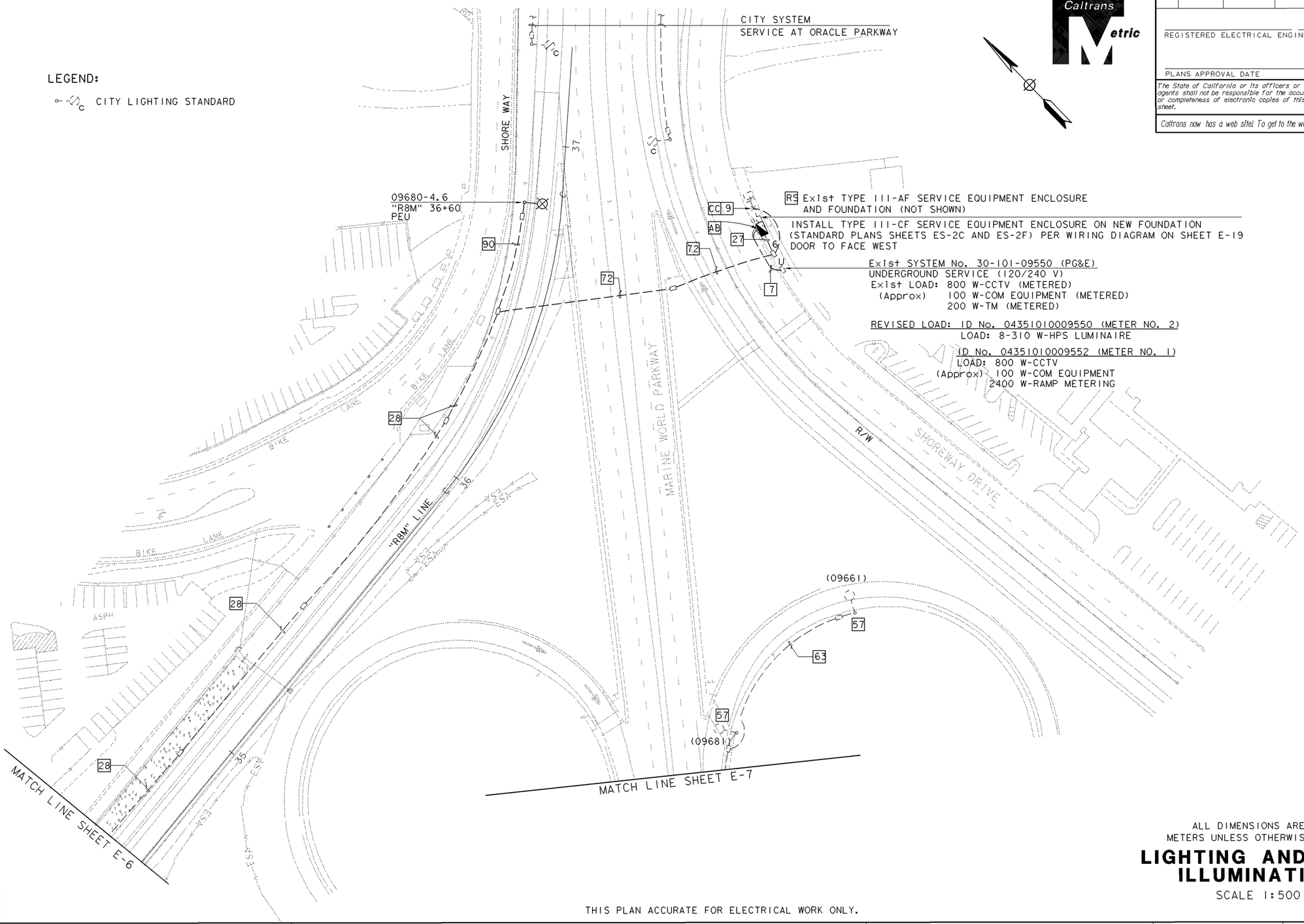

ALL DIMENSIONS ARE IN METERS UNLESS OTHERWISE SHOWN

LIGHTING AND SIGN ILLUMINATION

SCALE 1:500

THIS PLAN ACCURATE FOR ELECTRICAL WORK ONLY.

E-8

DATE	REVISED BY	DATE REVISED

CALCULATED/DESIGNED BY

CHECKED BY

PROJECT ENGINEER

STATE OF CALIFORNIA - DEPARTMENT OF TRANSPORTATION

Caltrans DESIGN

LAST REVISION 04-02-01

DATE PLOTTED => 10-APR-2001
TIME PLOTTED => 09:10

FOR REDUCED PLANS ORIGINAL SCALE IS IN MILLIMETERS 0 20 40 60 80

USERNAME => trmikesl
DGN FILE => dpm2_206.dgn

CU 00000

EA 000000

Return to Section 2 Table of Contents

FOR NOTES AND ABBREVIATIONS SEE SHEETS E-1 AND E-2.

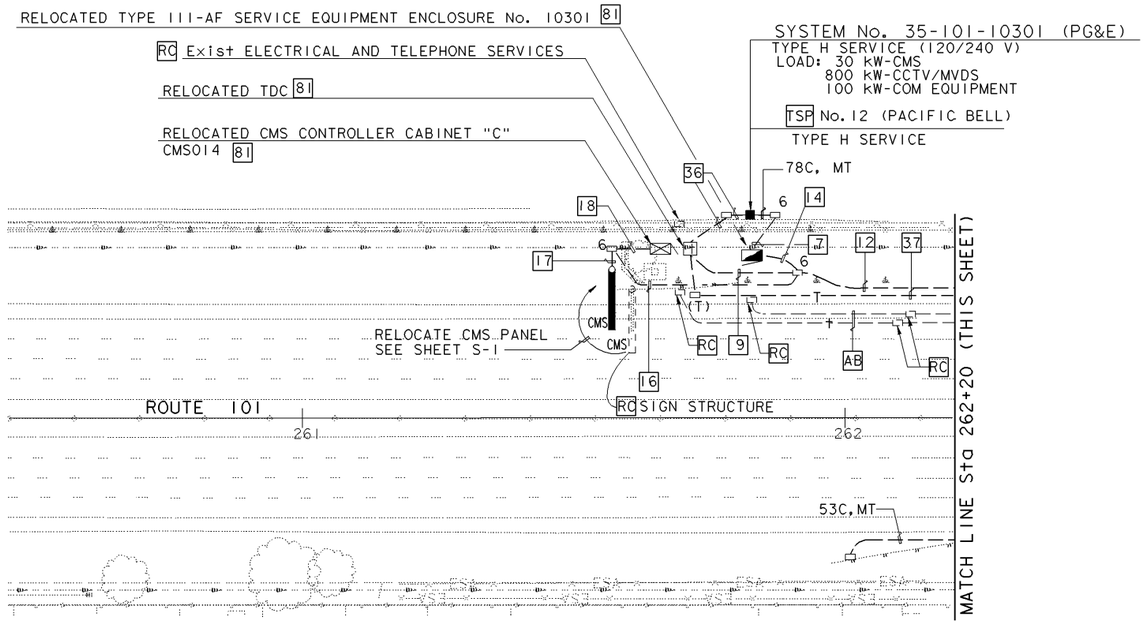

Abbreviations should be on the first sheet such as:

COM - Communications
MVDS - Microwave Vehicle Detection System

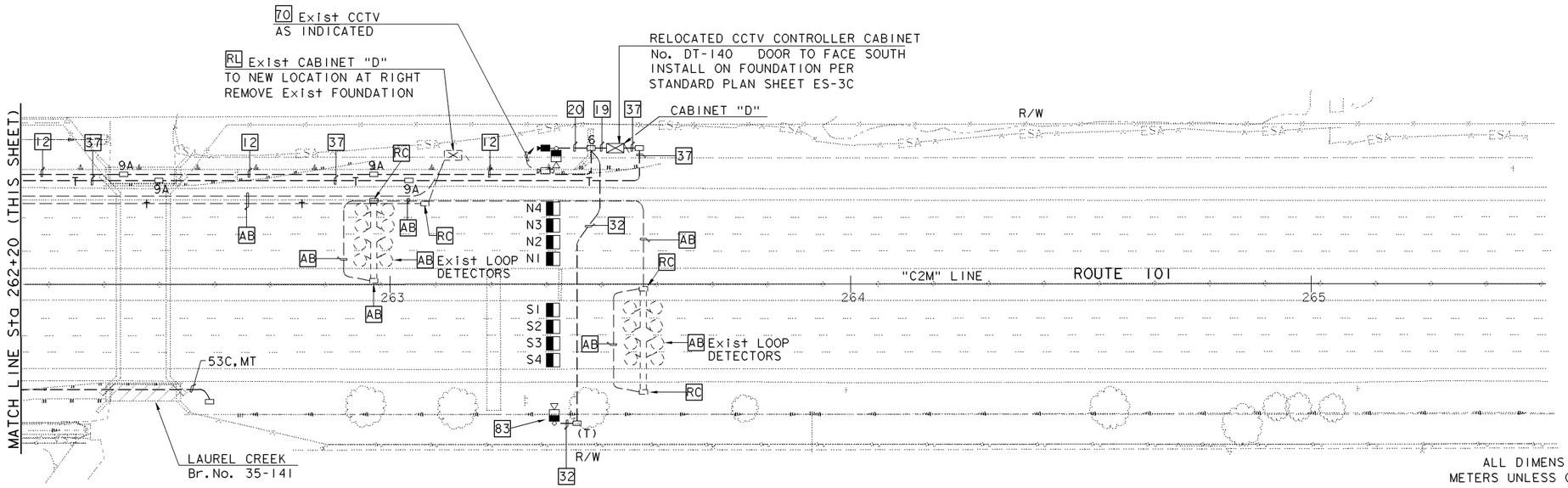

ALL DIMENSIONS ARE IN METERS UNLESS OTHERWISE SHOWN

MODIFY TRAFFIC OPERATION SYSTEM (LOCATION 3)

SCALE 1:500

E-13

THIS PLAN ACCURATE FOR ELECTRICAL WORK ONLY.

DIST	COUNTY	ROUTE	KILOMETER POST TOTAL PROJECT	SHEET No	TOTAL SHEETS

REGISTERED ELECTRICAL ENGINEER

PLANS APPROVAL DATE

REGISTERED PROFESSIONAL ENGINEER No. Exp. ELECTRICAL STATE OF CALIFORNIA

The State of California or its officers or agents shall not be responsible for the accuracy or completeness of electronic copies of this plan sheet.

Caltrans now has a web site! To get to the web site, go to: http://www.dot.ca.gov

Caltrans Metric

DATE	REVISED BY	DATE REVISED

CALCULATED/DESIGNED BY

CHECKED BY

PROJECT ENGINEER

STATE OF CALIFORNIA - DEPARTMENT OF TRANSPORTATION

Caltrans DESIGN

FOR REDUCED PLANS ORIGINAL SCALE IS IN MILLIMETERS 0 20 40 60 80

USERNAME => trmikesl
DGN FILE => dpm2_207.dgn

CU 00000 EA 000000

LAST REVISION 04-02-01 DATE PLOTTED => 10-APR-2001 TIME PLOTTED => 09:10

Return to Section 2 Table of Contents

DIST	COUNTY	ROUTE	KILOMETER POST TOTAL PROJECT	SHEET No	TOTAL SHEETS

REGISTERED ELECTRICAL ENGINEER

PLANS APPROVAL DATE

REGISTERED PROFESSIONAL ENGINEER No. Exp. ELECTRICAL STATE OF CALIFORNIA

The State of California or its officers or agents shall not be responsible for the accuracy or completeness of electronic copies of this plan sheet.

Caltrans now has a web site! To get to the web site, go to: http://www.dot.ca.gov

Caltrans Metric

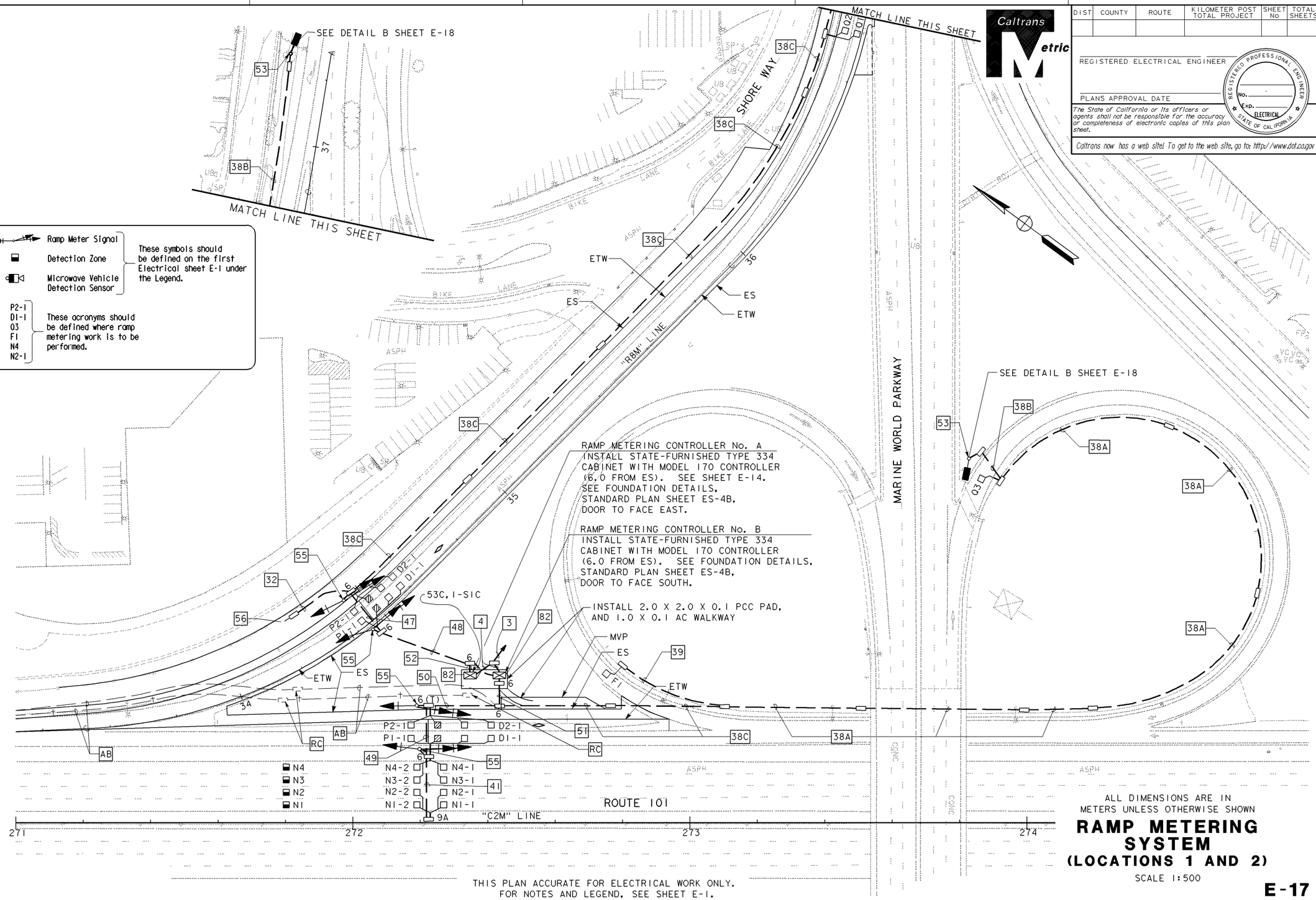

ALL DIMENSIONS ARE IN METERS UNLESS OTHERWISE SHOWN

RAMP METERING SYSTEM (LOCATIONS 1 AND 2)

SCALE 1:500

THIS PLAN ACCURATE FOR ELECTRICAL WORK ONLY.
FOR NOTES AND LEGEND, SEE SHEET E-1.

E-17

DATE	REVISED BY	DATE REVISED

CALCULATED/DESIGNED BY | CHECKED BY

PROJECT ENGINEER

STATE OF CALIFORNIA - DEPARTMENT OF TRANSPORTATION

Caltrans DESIGN

LAST REVISION 04-02-01 | DATE PLOTTED => 10-APR-2001 | TIME PLOTTED => 09:10

FOR REDUCED PLANS ORIGINAL SCALE IS IN MILLIMETERS 0 20 40 60 80

USERNAME => trmikesl
DGN FILE => dpm2_208.dgn

CU 00000 | EA 000000

Return to Section 2 Table of Contents

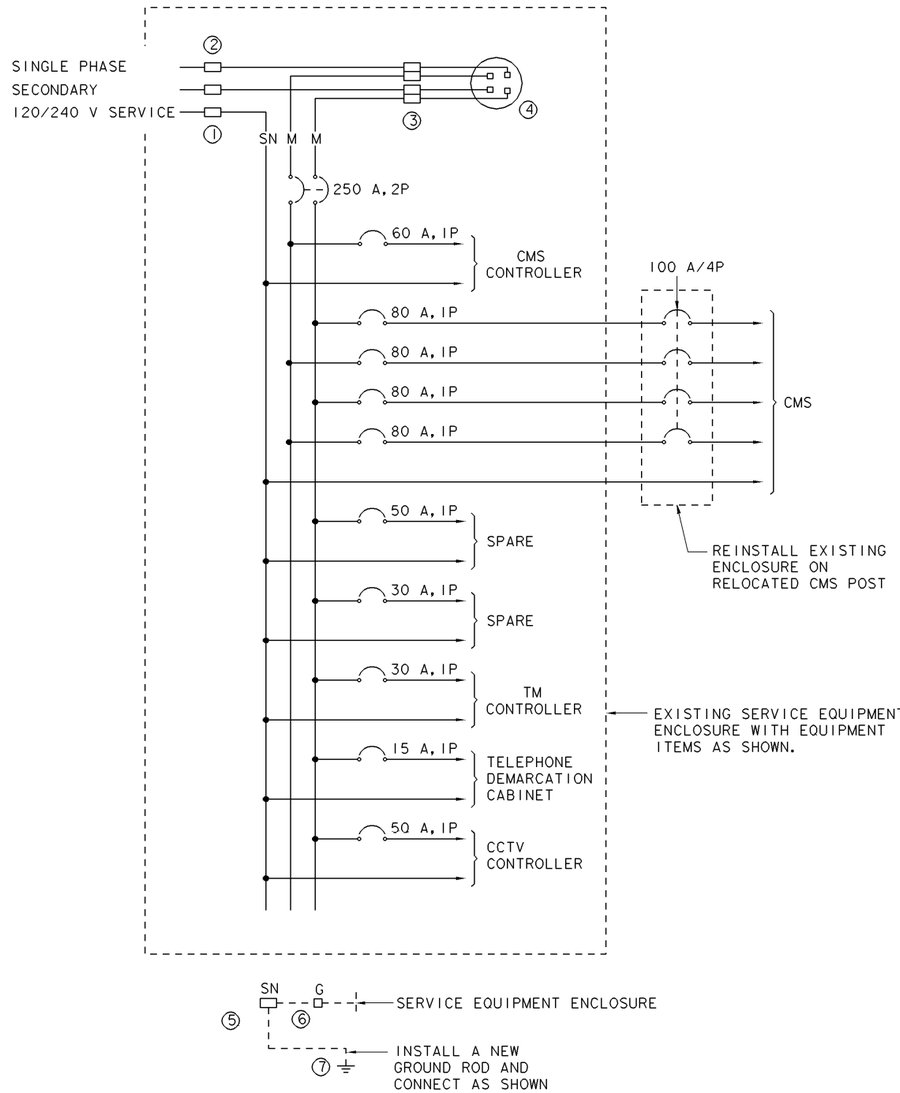

1 120/240 V SERVICE WIRING DIAGRAM

SYSTEM No. 35-101-10301

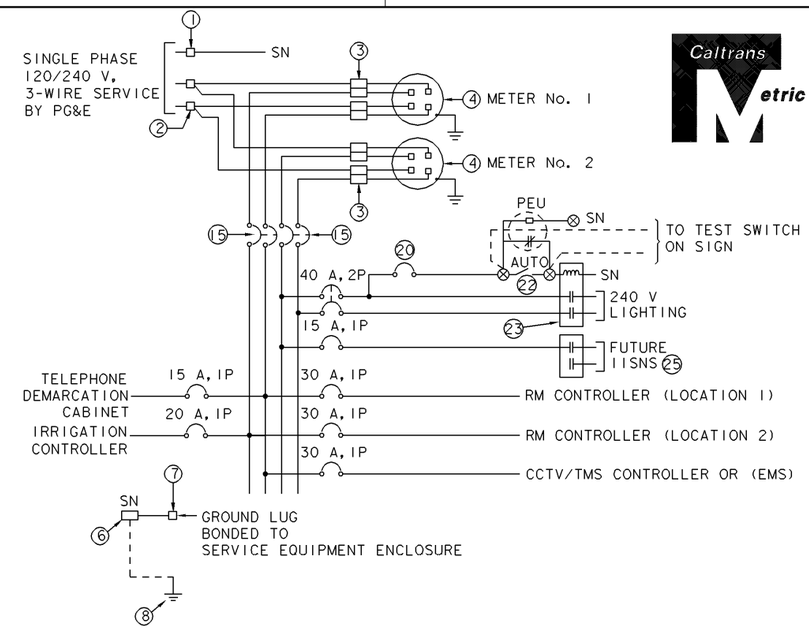

2 120/240 V SERVICE WIRING DIAGRAM

SYSTEM No. 35-101-09550 (E-9) SYSTEM No. 35-101-10682 (E-3)
(ROUTE 101 NB OFF-RAMP NEAR RALSTON AVENUE)

METER No. 1: TOS SYSTEM
METER No. 2: LIGHTING

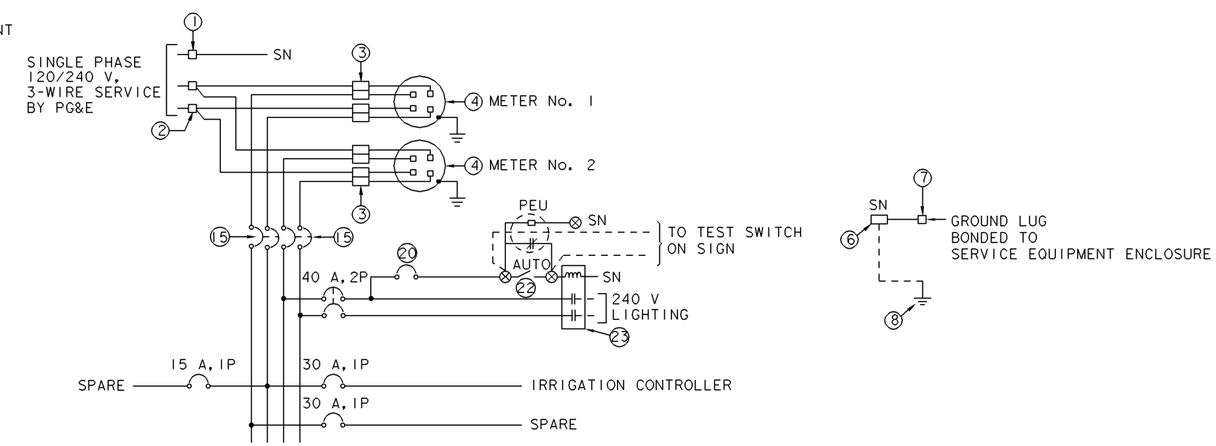

3 120/240 V SERVICE WIRING DIAGRAM

SYSTEM No. 35-101-09551 (E-9)
(WB RALSTON NEAR HILLAR STREET)

METER No. 1 IRRIGATION CONTROLLER
METER No. 2 LIGHTING

Caltrans Metric

DIST	COUNTY	ROUTE	KILOMETER POST TOTAL PROJECT	SHEET No	TOTAL SHEETS

REGISTERED ELECTRICAL ENGINEER

PLANS APPROVAL DATE

REGISTERED PROFESSIONAL ENGINEER No. Exp. ELECTRICAL STATE OF CALIFORNIA

The State of California or its officers or agents shall not be responsible for the accuracy or completeness of electronic copies of this plan sheet.

Caltrans now has a web site! To get to the web site, go to: http://www.dot.ca.gov

NOTE:
SEE STANDARD PLAN SHEETS ES-2C AND ES-2F AND PROVIDE EQUIPMENT ITEMS AS SHOWN.

"TOS - TRAFFIC OPERATION SYSTEM" should be added to the abbreviations on sheet E-1 of the Project Plans.

ALL DIMENSIONS ARE IN METERS UNLESS OTHERWISE SHOWN

ELECTRICAL DETAILS

NO SCALE

E-19

THIS PLAN ACCURATE FOR ELECTRICAL WORK ONLY.

DATE	REVISED BY	DATE REVISED

CALCULATED/DESIGNED BY
CHECKED BY
PROJECT ENGINEER

STATE OF CALIFORNIA - DEPARTMENT OF TRANSPORTATION
Caltrans DESIGN

LAST REVISION 04-02-01 | DATE PLOTTED => 10-APR-2001 | TIME PLOTTED => 09:11

FOR REDUCED PLANS ORIGINAL SCALE IS IN MILLIMETERS 0 20 40 60 80

USERNAME => trmikesi
DGN FILE => dpm2_209.dgn

CU 00000 EA 000000

Return to Section 2 Table of Contents

Return to Section 2 Table of Contents

(Blank)

2-2.24 Structures (Bridge Plans and Details)

The Office of Structures Design has the responsibility of preparing bridge plans. Plans are sent to the Districts for a check on all data pertaining to horizontal and vertical alignment and for verification of clearances.

In addition to bridge plans, the design and aesthetic features of new buildings such as maintenance stations, roadside rest, pumping plants, some sound walls, retaining walls and earth retaining structures, and additions and modifications to existing buildings or miscellaneous transportation facilities, are the responsibility of the Office of Structures Design.

Standard drawings applicable to building related work are available from the Transportation Architecture Branch of the Office of Structures Design.

General Plan, Deck Contours, Foundation Plan and Log of Test Boring sheets should be dimensioned in meters. This will provide consistency with the metric stationing and lane widths shown on the road plans. All other detail sheets are to be dimensioned in millimeters.

The structure depth on the Typical Section of the General Plan should be dimensioned in millimeters.

For projects where railroads are involved, pertinent dimensions within railroad right of way shall be shown in dual units with metric units being primary and English units in parenthesis. All other dimensioning on the plans shall be shown in metric only. Examples of pertinent dimensions would be right of way widths, horizontal and vertical clearances, rail elevations and track layout dimensioning.

As-Built Log of Test Borings Sheets may be used in the imperial units provided that the metric layout line be placed on the plan view and tied to the original boring locations in dual dimensions (imperial and metric).

For more guidelines on Strutures (Bridge Plans and Details), see Caltrans Bridge Design Details Manual.

Return to Section 2 Table of Contents, page 2-21

DIST.	COUNTY	ROUTE	KILOMETER POST TOTAL PROJECT	SHEET NO.	TOTAL SHEETS

Caltrans Metric

REGISTERED ENGINEER - CIVIL

PLANS APPROVAL DATE

REGISTERED PROFESSIONAL ENGINEER No. Exp. CIVIL STATE OF CALIFORNIA

The State of California or its officers or agents shall not be responsible for the accuracy or completeness of electronic copies of this plan sheet.

Caltrans now has a web site! To get to the web site, go to: http://www.dot.ca.gov

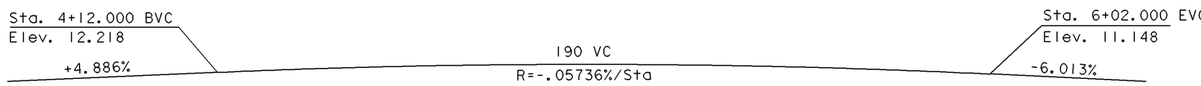

PROFILE GRADE

NO SCALE

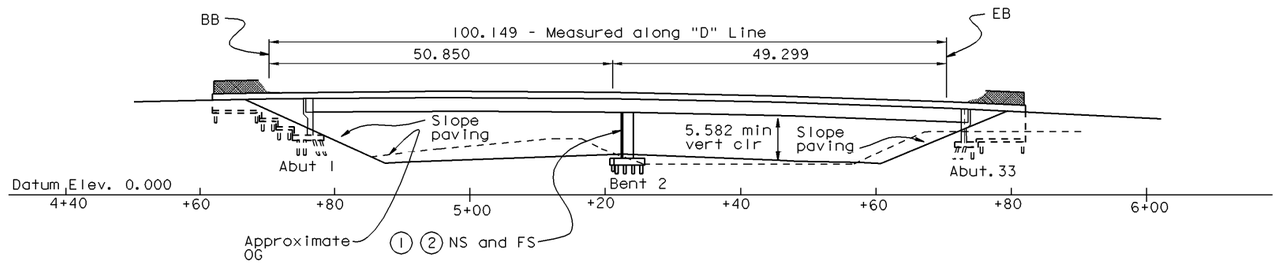

ELEVATION

1:400

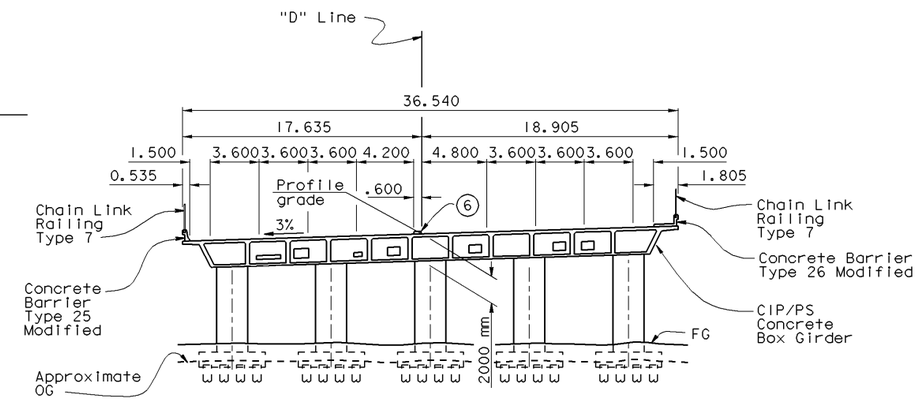

TYPICAL SECTION

1:200

Note:
A Existing bridge not shown.

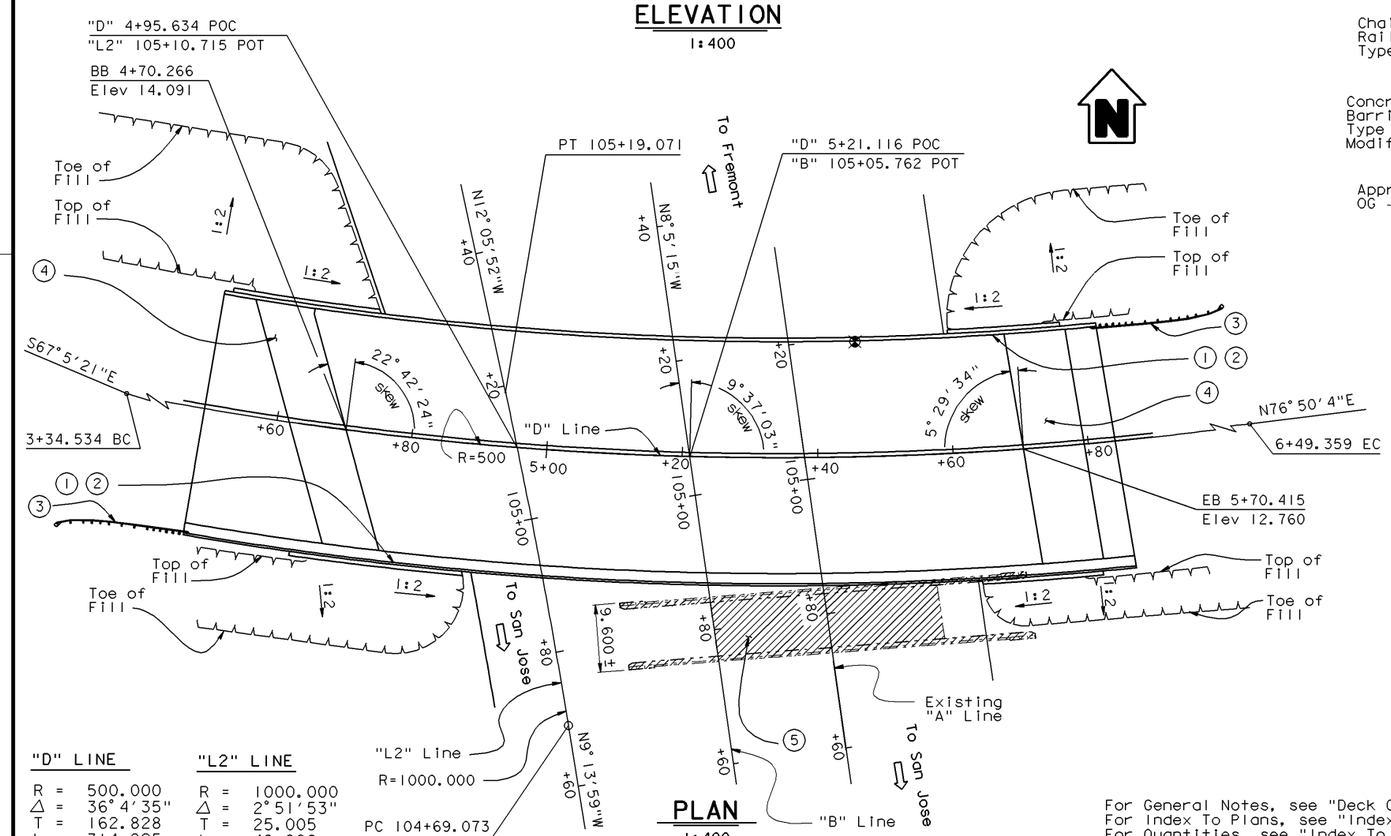

PLAN

1:400

"D" LINE		"L2" LINE	
R =	500.000	R =	1000.000
Δ =	36°4'35"	Δ =	2°51'53"
T =	162.828	T =	25.005
L =	314.825	L =	49.998

For General Notes, see "Deck Contours" sheet.
For Index To Plans, see "Index To Plans" sheet.
For Quantities, see "Index To Plans" sheet.

NOTES:

1. Paint "Br. No. 37-0581"
2. Paint "Dixon Landing Road OC"
3. MBGR, See "Road Plans"
4. Structure Approach Type N(14D) Mod
5. Remove existing reinforced concrete bridge, Br. No. 37-110
6. Raised median

⊗ Indicates minimum vertical clearance

▨ Indicates exist bridge removal

ALL DIMENSIONS ARE IN METERS UNLESS OTHERWISE SHOWN

DESIGN	BY	CHECKED	LOAD FACTOR DESIGN	LIVE LOADING: HS20-44 AND ALTERNATIVE AND PERMIT DESIGN LOAD	
DETAILS	BY	CHECKED	LAYOUT	BY	CHECKED
QUANTITIES	BY	CHECKED	SPECIFICATIONS	BY	PLANS AND SPECS COMPARED

DESIGN ENGINEER

STATE OF CALIFORNIA DEPARTMENT OF TRANSPORTATION

DIVISION OF STRUCTURES STRUCTURE DESIGN

BRIDGE NO.

KILOMETER POST

DIXON LANDING ROAD OC (REPLACE)

GENERAL PLAN

STRUCTURES DESIGN GENERAL PLAN SHEET (METRIC) (REV.4/15/97)

ORIGINAL SCALE IN MILLIMETERS FOR REDUCED PLANS 0 10 20 30 40 50 60 70 80 90 100

CU 0000
EA 000000

DISREGARD PRINTS BEARING EARLIER REVISION DATES

REVISION DATES (PRELIMINARY STAGE ONLY): 2/1/99 2/26/99 3/22/99 3/14/00 5-23-00 9-13-00 9-26-00

SHEET 1 OF 34

FILE => dpm2_213.dgn

USERNAME => trmikes1 DATE PLOTTED => 10-APR-2001 TIME PLOTTED => 09:11

04-02-01

Return to Section 2 Table of Contents

DIST	COUNTY	ROUTE	KILOMETER POST TOTAL PROJECT	SHEET No	TOTAL SHEETS

REGISTERED CIVIL ENGINEER

PLANS APPROVAL DATE

REGISTERED PROFESSIONAL ENGINEER No. Exp. CIVIL STATE OF CALIFORNIA

The State of California or its officers or agents shall not be responsible for the accuracy or completeness of electronic copies of this plan sheet.

Caltrans now has a web site! To get to the web site, go to: http://www.dot.ca.gov

INDEX TO PLANS

SHEET NO.	TITLE
1	GENERAL PLAN
2	INDEX TO PLANS
3	DECK CONTOURS
4	FOUNDATION PLAN
5	ABUTMENT 1 LAYOUT
6	ABUTMENT 3 LAYOUT
7	ABUTMENT PILE LAYOUT
8	ABUTMENT DETAILS NO. 1
9	ABUTMENT DETAILS NO. 2
10	RETAINING WALL DETAILS NO. 1
11	RETAINING WALL DETAILS NO. 2
12	RETAINING WALL DETAILS NO. 3
13	BENT DETAILS NO. 1
14	BENT DETAILS NO. 2
15	BENT DETAILS NO. 3
16	TYPICAL SECTION
17	GIRDER LAYOUT
18	GIRDER REINFORCEMENT
19	DECK DRAIN LAYOUT
20	DECK DRAIN TYPE D-2 MODIFIED
21	JOINT SEAL DETAILS
22	JOINT SEAL ASSEMBLY (MAXIMUM MOVEMENT RATING=100 mm)
23	UTILITY DETAILS
24	STRUCTURE APPROACH DRAINAGE DETAILS
25	STRUCTURE APPROACH TYPE N(14D) MOD
26	SLOPE PAVING - FULL SLOPE
27	LOG OF TEST BORINGS NO. 1
28	LOG OF TEST BORINGS NO. 2
29	LOG OF TEST BORINGS NO. 3
30	LOG OF TEST BORINGS NO. 4
31	LOG OF TEST BORINGS NO. 5
32	LOG OF TEST BORINGS NO. 6
33	LOG OF TEST BORINGS NO. 7
34	LOG OF TEST BORINGS NO. 8

STANDARD PLANS DATED JULY 1999

A10A	ABBREVIATIONS
A10B	SYMBOLS
A62B	LIMITS OF PAYMENT FOR EXCAVATION AND BACKFILL BRIDGE SURCHARGE AND WALL
A62C	LIMITS OF PAYMENT FOR EXCAVATION AND BACKFILL BRIDGE
B0-1	BRIDGE DETAILS
B0-3	BRIDGE DETAILS
B0-5	BRIDGE DETAILS
B0-13	BRIDGE DETAILS
B2-6	PILE DETAILS CLASS 400C AND CLASS 625C
B3-1	RETAINING WALL TYPE 1 H=1200 THROUGH H=9100 mm
B3-8	RETAINING WALL DETAILS NO. 1
B7-1	BOX GIRDER DETAILS
B7-6	DECK DRAINS TYPES D-1 AND D-2
B7-10	UTILITY OPENING BOX GIRDER
B7-11	UTILITY DETAILS
B8-5	CAST-IN-PLACE PRESTRESSED GIRDER DETAILS
B11-52	CHAIN LINK RAILING TYPE 7
B11-53	CONCRETE BARRIER TYPE 25
B11-54	CONCRETE BARRIER TYPE 26
B14-3	COMMUNICATION AND SPRINKLER CONTROL CONDUITS (CONDUIT LESS THEN SIZE 103)
B14-4	WATER SUPPLY LINE (BRIDGE) (PIPE SIZES LESS THAN NPS 4)
B14-5	WATER SUPPLY LINE (DETAILS) (PIPE SIZES LESS THEN NPS 4)

Standard Plan Sheet No.
Detail No.

PILE DATA TABLE

LOCATION	PILE TYPE	DESIGN LOADING	NORMAL RESISTANCE COMPRESSION	NORMAL RESISTANCE TENSION	DESIGN TIP ELEVATION	SPECIFIED TIP ELEVATION
ABUT 1	CLASS 625C ALTERNATIVE 'X'	625 kN	1250 kN	0 kN	-12.8 (1)	-12.8
BENT 2	610 mm CISS	575 kN	1150 kN	250 kN	-14.5 (1), -7.2 (2), -23 (3)	-23 (3)
ABUT 3	CLASS 625C ALTERNATIVE 'X'	625 kN	1250 kN	0 kN	-13.9 (1)	-13.9
RET WALL ABUT 1 RIGHT	CLASS 400C ALTERNATIVE 'X'	400 kN	800 kN	0 kN	-9.0 (1)	-9.0
RET WALL ABUT 1 LEFT	CLASS 400C ALTERNATIVE 'X'	400 kN	800 kN	0 kN	-9.0 (1)	-9.0
RET WALL ABUT 4 RIGHT	CLASS 400C ALTERNATIVE 'X'	400 kN	800 kN	0 kN	-9.2 (1)	-10.2
RET WALL ABUT 4 LEFT	CLASS 400C ALTERNATIVE 'X'	400 kN	800 kN	0 kN	-9.2 (1)	-10.2

Note:
Design Tip Elevation is controlled by the following demands:
(1) Compression, (2) Tension, (3) Lateral Loads

QUANTITIES

Bridge Removal, Location A	Lump Sum
Structure Excavation (Bridge)	1235 m^3
Structure Backfill (Bridge)	180 m^3
Structure Backfill (Bridge) (Lightweight Aggregate)	980 m^3
NPS 3 Supply Line (Bridge)	130 m
Furnish Piling (Class 625C) (Alt X)	2643 m
Drive Piling (Class 625C) (Alt X)	126 ea
Furnish Piling (Class 400C) (Alt X)	676 m
Drive Piling (Class 400C) (Alt X)	34 ea
Furnish Cast-in-Steel-Shell Concrete Piling (610 mm)	2200 m
Drive Cast-in-Steel-Shell Concrete Pile (610 mm)	80 ea
Prestressing Cast-in-Place Concrete	Lump Sum
Structural Concrete, Bridge Footing	358 m^3
Structural Concrete, Bridge	2740 m^3
Structural Concrete, Approach Slab (Type N)	430 m^3
Architectural Treatment	47 m^2
Joint Seal Assembly (MR=60 mm)	72 m
Bar Reinforcing Steel (Bridge)	413 900 kg
Bar Reinforcing (Epoxy Coated) Bridge	1582 kg
Slope Paving (Masonry Block)	650 m^2
Minor Concrete (Curb)	15 m^3
Miscellaneous Metal (Bridge)	5660 kg
Chain Link Railing (Type 7)	269 m
Concrete Barrier (Type 25 Modified)	128 m
Concrete Barrier (Type 26 Modified)	141 m

	BY	CHECKED
DESIGN		
DETAILS		
QUANTITIES		

STATE OF CALIFORNIA
DEPARTMENT OF TRANSPORTATION

DIVISION OF STRUCTURES
STRUCTURE DESIGN

BRIDGE NO.
KILOMETER POST

DIXON LANDING ROAD OC (REPLACE)

INDEX TO PLANS

STRUCTURES DESIGN DETAIL SHEET (METRIC) (REV. 3/1/99)

ORIGINAL SCALE IN MILLIMETERS FOR REDUCED PLANS 0 10 20 30 40 50 60 70 80 90 100

CU 0000
EA 000000

DISREGARD PRINTS BEARING EARLIER REVISION DATES

REVISION DATES (PRELIMINARY STAGE ONLY): 3-30-00, 5-8-00, 9-13-00, 09-26-00

SHEET 2 OF 34

FILE => dpm2_214.dgn

USERNAME => trmikesl DATE PLOTTED => 10-APR-2001 TIME PLOTTED => 09:11

04-02-01

Return to Section 2 Table of Contents

DIST	COUNTY	ROUTE	KILOMETER POST TOTAL PROJECT	SHEET No	TOTAL SHEETS

REGISTERED CIVIL ENGINEER

PLANS APPROVAL DATE

REGISTERED PROFESSIONAL ENGINEER No. Exp. CIVIL STATE OF CALIFORNIA

The State of California or its officers or agents shall not be responsible for the accuracy or completeness of electronic copies of this plan sheet.

Caltrans now has a web site! To get to the web site, go to: http://www.dot.ca.gov

Caltrans Metric

Notes:
□ - Indicates hole meter contours.
× - 2.5 m intervals along station line.
Contours do not include camber.
Contour interval = 0.05 m

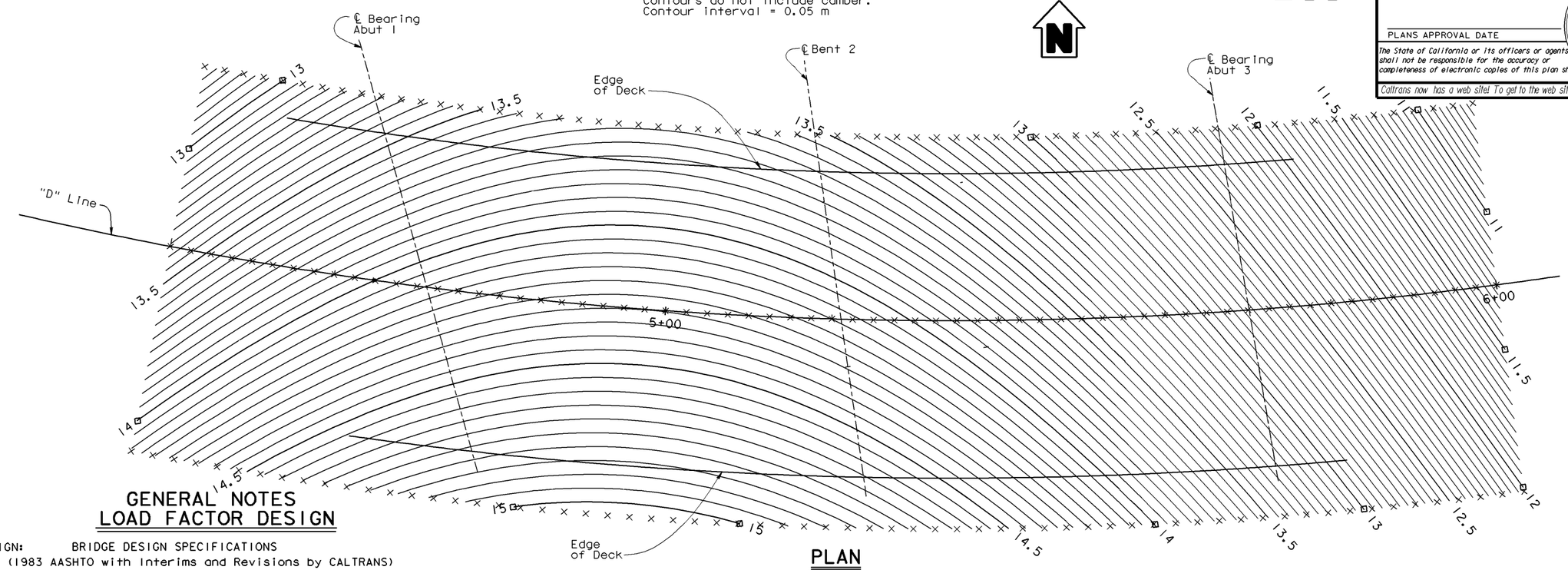

PLAN
1:250

GENERAL NOTES
LOAD FACTOR DESIGN

DESIGN: BRIDGE DESIGN SPECIFICATIONS (1983 AASHTO with Interims and Revisions by CALTRANS)

SEISMIC DESIGN: Caltrans Seismic Design Criteria (SDC) Version 1.1 July 1999

DEAD LOAD: Includes 1.68 KPa for future wearing surface.

LIVE LOADING: HS20-44 and alternative and permit design load.

SEISMIC LOADING: See Seismic Site Specific ARS Curve.

REINFORCED CONCRETE:
f_y = 420 MPa
f'_c = 28 MPa (unless otherwise noted)
n = 8
Transverse Deck Slabs (Working Stress Design)
f_s = 140 MPa
f_c = 8 MPa
n = 10

PRESTRESSED CONCRETE: See "Prestressing Notes"

PILE DATA: See "Pile Data Table" on "Index To Plans" sheet.

BACKFILL: Lightweight aggregate material shall be used at abutments and retaining wall.

PRESTRESSING NOTES

1860 MPa Low Relaxation Strand:

P_{jack} = 134 100 kN

Anchor Set = 10 mm

Total Number of Girders = 12

Distribution of prestress force (Pjack) between girders shall not exceed the ratio of 3:2. Maximum final force variation between girders shall not exceed 3225 kN.

Concrete: f'_c = 35 MPa @ 28 days

f'_{ci} = 25 MPa @ time of stressing

Contractor shall submit elongation calculations based on initial stress at

☒ = 0.919 times jacking stress.

One end stressing shall be performed from the Abut 1 end.

Seismic Site Specific ARS Curve

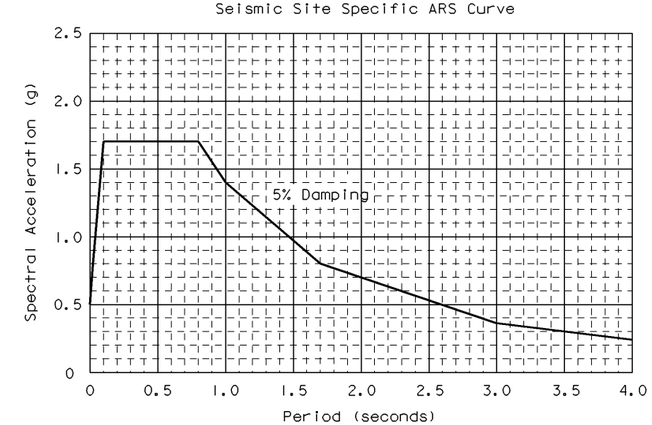

ALL DIMENSIONS ARE IN METERS UNLESS OTHERWISE SHOWN

DESIGN	BY	CHECKED	
DETAILS	BY	CHECKED	
QUANTITIES	BY	CHECKED	

STATE OF CALIFORNIA
DEPARTMENT OF TRANSPORTATION

DIVISION OF STRUCTURES
STRUCTURE DESIGN

BRIDGE NO.
KILOMETER POST

DIXON LANDING ROAD OC (REPLACE)
DECK CONTOURS

STRUCTURES DESIGN DETAIL SHEET (METRIC) (REV. 3/1/99)

ORIGINAL SCALE IN MILLIMETERS FOR REDUCED PLANS 0 10 20 30 40 50 60 70 80 90 100

CU 0000
EA 000000

FILE => dpm2_215.dgn

DISREGARD PRINTS BEARING EARLIER REVISION DATES

REVISION DATES (PRELIMINARY STAGE ONLY) 03-24-00 5-3-00 9-13-00 9-26-00

SHEET 3 OF 34

USERNAME => trmikesl DATE PLOTTED => 10-APR-2001 TIME PLOTTED => 09:11

04-02-01

Return to Section 2 Table of Contents

NO	R	Δ	T	L
①	500.00	36° 4' 35"	162.828	314.825
②	1000.00	2° 51' 53"	25.005	49.998

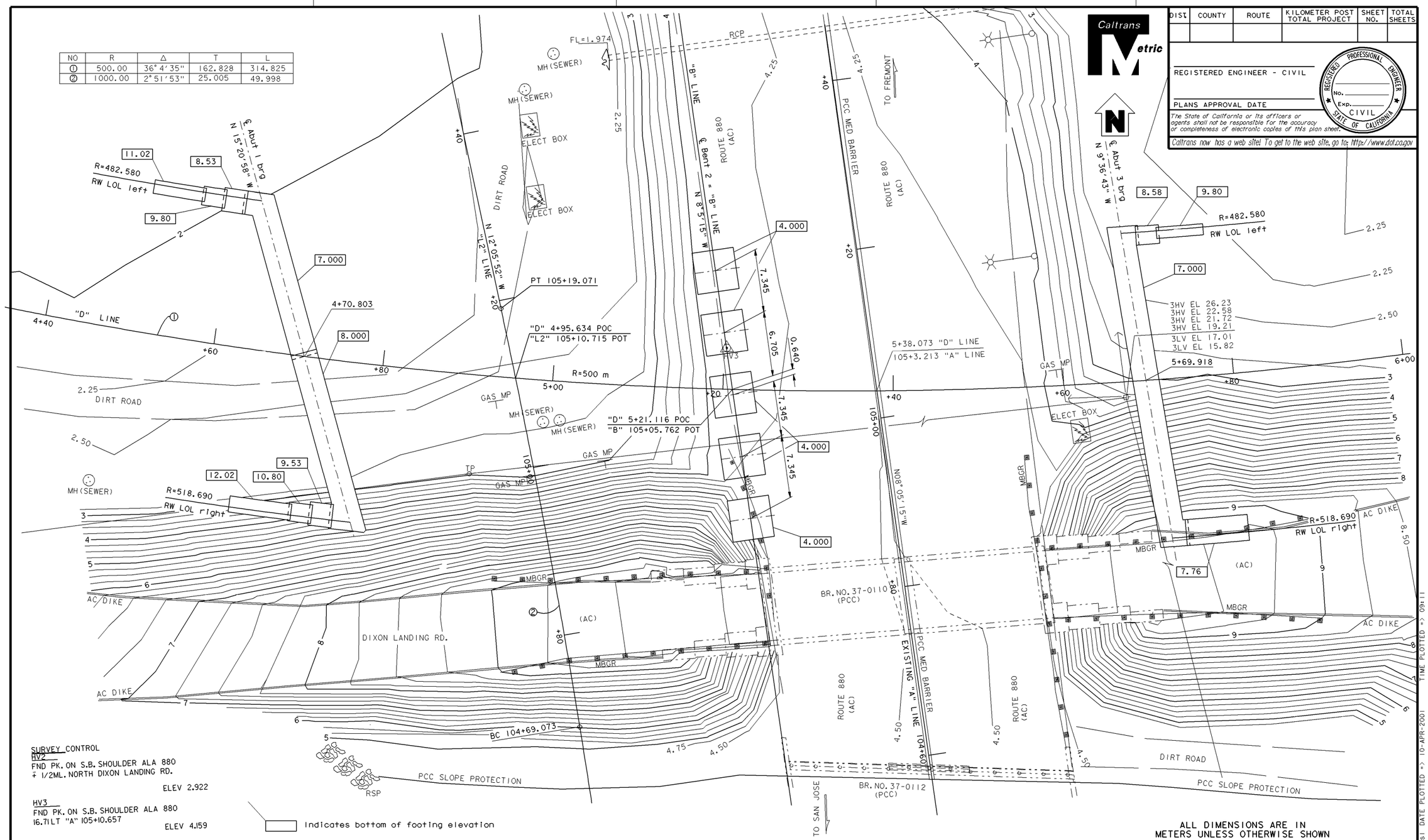

SURVEY CONTROL
HV2
FND PK. ON S.B. SHOULDER ALA 880
∓ 1/2ML. NORTH DIXON LANDING RD.
ELEV 2.922

HV3
FND PK. ON S.B. SHOULDER ALA 880
16.71LT "A" 105+10.657
ELEV 4.159

Indicates bottom of footing elevation

ALL DIMENSIONS ARE IN METERS UNLESS OTHERWISE SHOWN

Caltrans Metric

DIST	COUNTY	ROUTE	KILOMETER POST TOTAL PROJECT	SHEET NO.	TOTAL SHEETS

REGISTERED ENGINEER - CIVIL

PLANS APPROVAL DATE

REGISTERED PROFESSIONAL ENGINEER No. Exp. CIVIL STATE OF CALIFORNIA

The State of California or its officers or agents shall not be responsible for the accuracy or completeness of electronic copies of this plan sheet.

Caltrans now has a web site! To get to the web site, go to: http://www.dot.ca.gov

PRELIMINARY INVESTIGATION SECTION

SCALE	VERT. DATUM NAVD 88	PHOTOGRAMMETRY AS OF:		DRAWN	BY
1:200	HORZ. DATUM NAD 83	SURVEYED	BY	TRACED	BY
ALIGNMENT TIES DISTRICT		FIELD CHECKED	BY	CHECKED	BY

STRUCTURES FOUNDATION PLAN SHEET (METRIC) (REV. 6/9/97)

DESIGN	BY		CHECKED
DETAILS	BY		CHECKED
QUANTITIES	BY		CHECKED

ORIGINAL SCALE IN MILLIMETERS FOR REDUCED PLANS 0 10 20 30 40 50 60 70 80 90 100

STATE OF CALIFORNIA
DEPARTMENT OF TRANSPORTATION

DIVISION OF STRUCTURES
STRUCTURE DESIGN

CU 0000
EA 000000

FILE => dpm2_216.dgn

BRIDGE NO.
KILOMETER POST

DIXON LANDING ROAD OC (REPLACE)

FOUNDATION PLAN

DISREGARD PRINTS BEARING EARLIER REVISION DATES

REVISION DATES (PRELIMINARY STAGE ONLY) 10-22-97 03-15-00 03-21-00 03-29-00 5-8-00 9-13-00

SHEET 4 OF 34

USERNAME => trmikest DATE PLOTTED => 10-APR-2001 TIME PLOTTED => 09:11

04-02-01

Return to Section 2 Table of Contents

DIST	COUNTY	ROUTE	KILOMETER POST TOTAL PROJECT	SHEET No	TOTAL SHEETS

REGISTERED CIVIL ENGINEER

PLANS APPROVAL DATE

REGISTERED PROFESSIONAL ENGINEER No. Exp. CIVIL STATE OF CALIFORNIA

The State of California or its officers or agents shall not be responsible for the accuracy or completeness of electronic copies of this plan sheet.

Cal-Trans now has a web site! To get to the web site, go to: http://www.dot.ca.gov

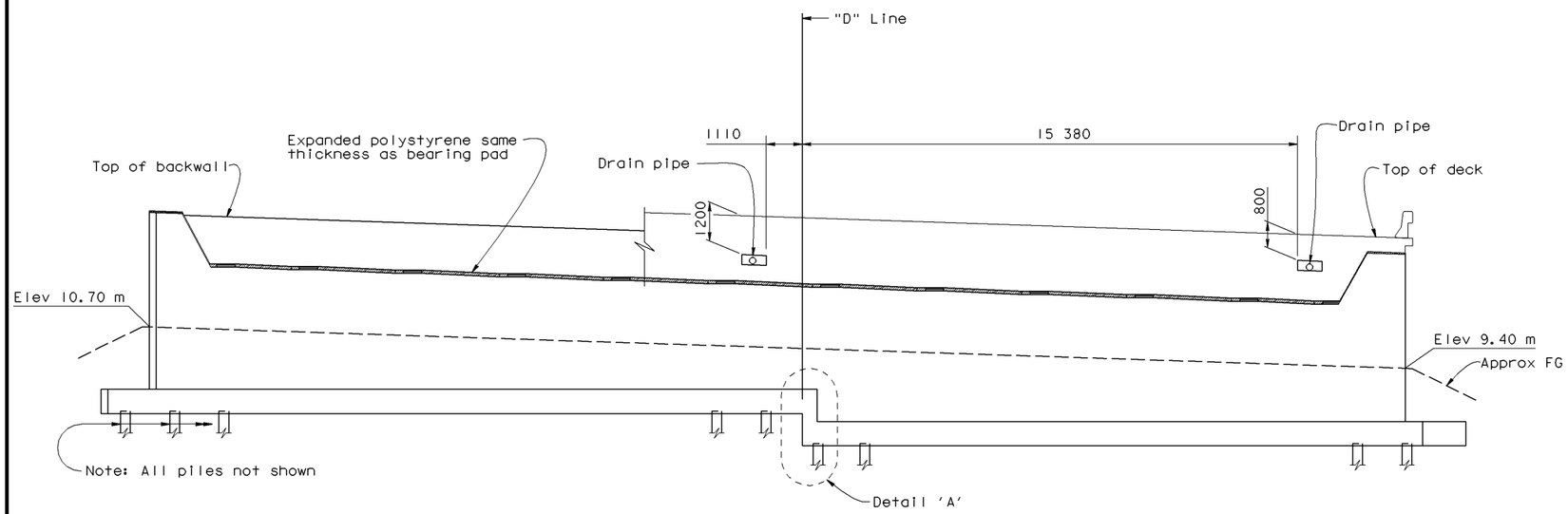

ELEVATION
1:80

B7-10 / U2

Utility openings not shown for clarity, see "Typical Section" sheet.

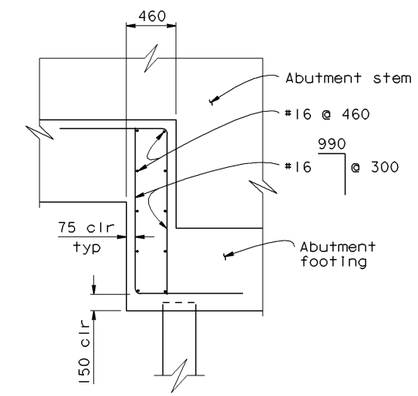

DETAIL A
1:25

Reinforcement shown in 'Detail A' is additional to footing reinforcement shown in 'Section A-A' on "Abutment Details No. 1" sheet.

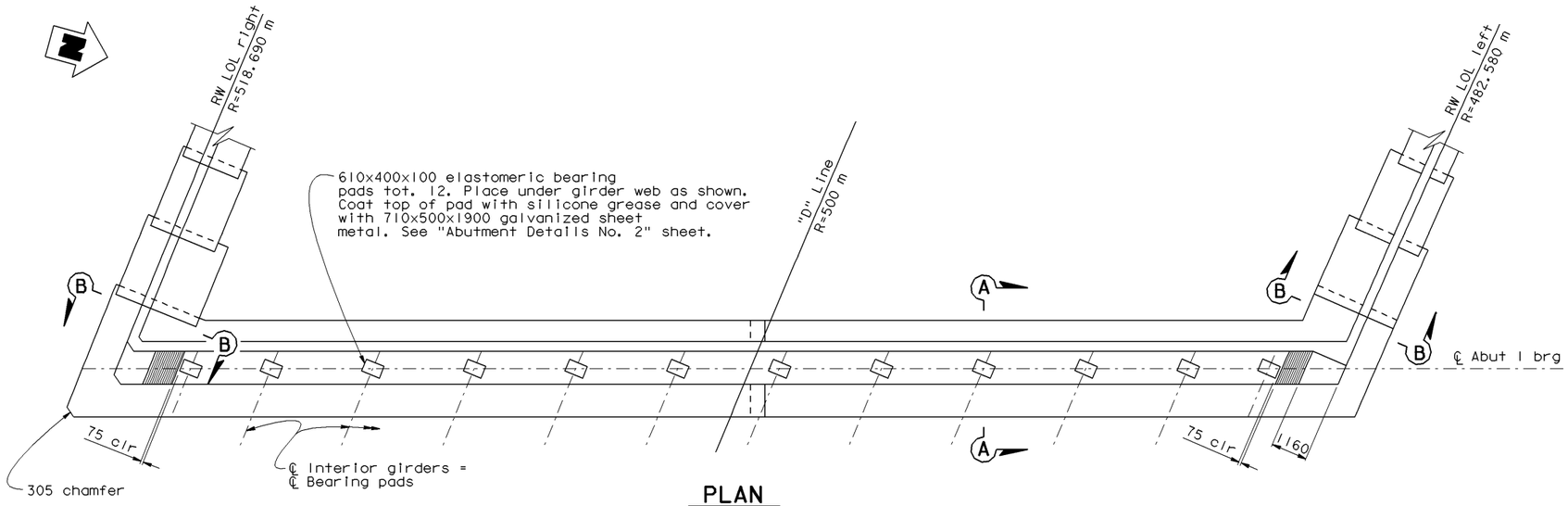

PLAN
1:80

Notes:

1. For Sections 'A-A' and 'B-B', see "Abutment Details No. 1" sheet.
2. For information not shown, see "Abutment Pile Layout" sheet and "Retaining Wall Details" sheets.

ALL DIMENSIONS ARE IN MILLIMETERS UNLESS OTHERWISE SHOWN

DESIGN	BY	CHECKED	
DETAILS	BY	CHECKED	
QUANTITIES	BY	CHECKED	

STATE OF CALIFORNIA DEPARTMENT OF TRANSPORTATION

DIVISION OF STRUCTURES
STRUCTURE DESIGN

BRIDGE NO.
KILOMETER POST

DIXON LANDING ROAD OC (REPLACE)
ABUTMENT 1 LAYOUT

STRUCTURES DESIGN DETAIL SHEET (METRIC) (REV. 3/1/99)

ORIGINAL SCALE IN MILLIMETERS FOR REDUCED PLANS 0 10 20 30 40 50 60 70 80 90 100

CU 0000
EA 000000

FILE => dpm2_217.dgn

DISREGARD PRINTS BEARING EARLIER REVISION DATES

REVISION DATES (PRELIMINARY STAGE ONLY): 03-15-00 03-24-00 03-29-00 03-30-00 9-13-00

SHEET 5 OF 34

USERNAME => trmikesl DATE PLOTTED => 10-APR-2001 TIME PLOTTED => 09:11

04-02-01

Return to Section 2 Table of Contents

DIST	COUNTY	ROUTE	KILOMETER POST TOTAL PROJECT	SHEET No	TOTAL SHEETS

Caltrans Metric

REGISTERED CIVIL ENGINEER

PLANS APPROVAL DATE

REGISTERED PROFESSIONAL ENGINEER No. Exp. CIVIL STATE OF CALIFORNIA

The State of California or its officers or agents shall not be responsible for the accuracy or completeness of electronic copies of this plan sheet.

Cal-Trans now has a web site! To get to the web site, go to: http://www.dot.ca.gov

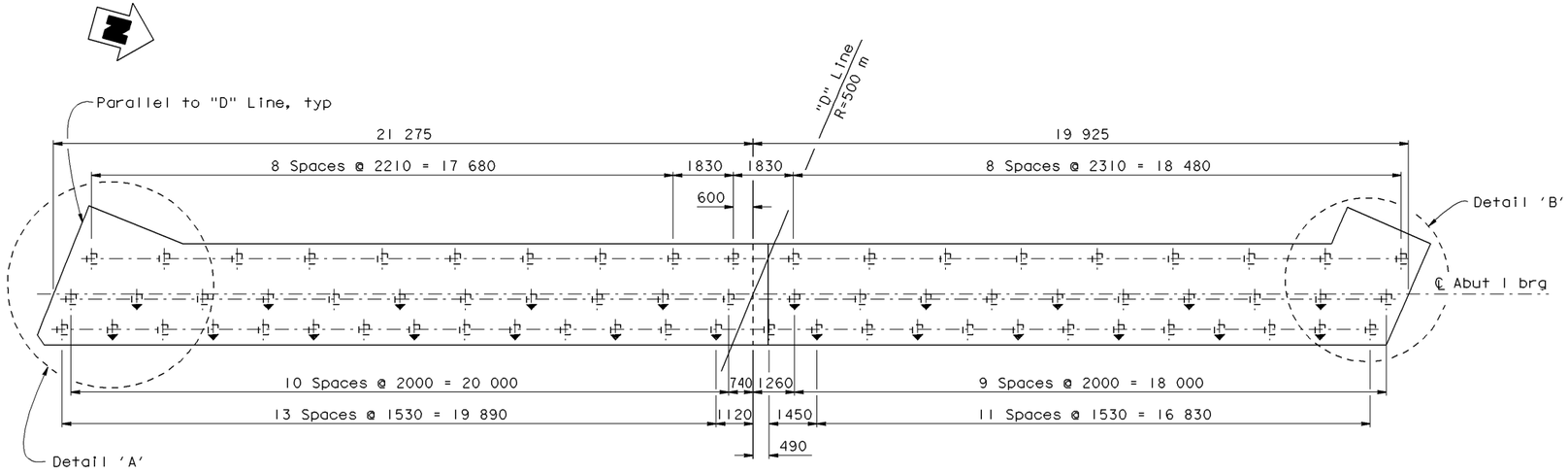

ABUTMENT 1

1:80

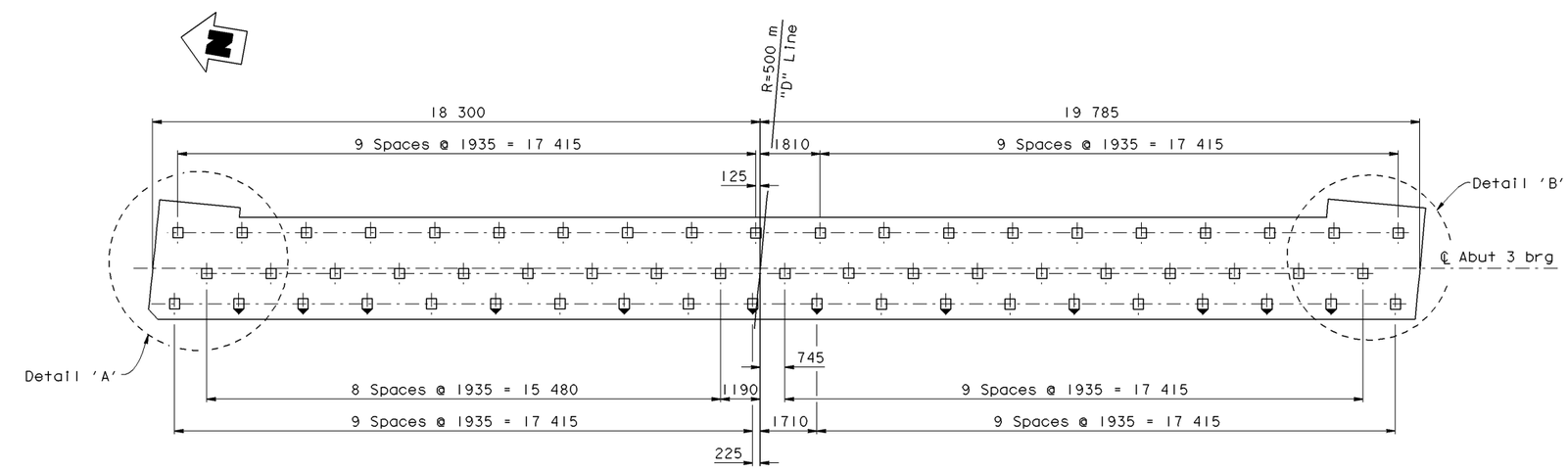

ABUTMENT 3

1:80

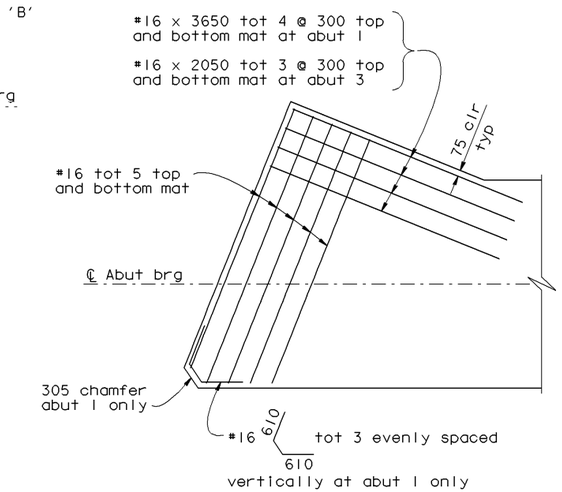

DETAIL A

1:40

Abutment 1 shown, Abutment 3 similar.

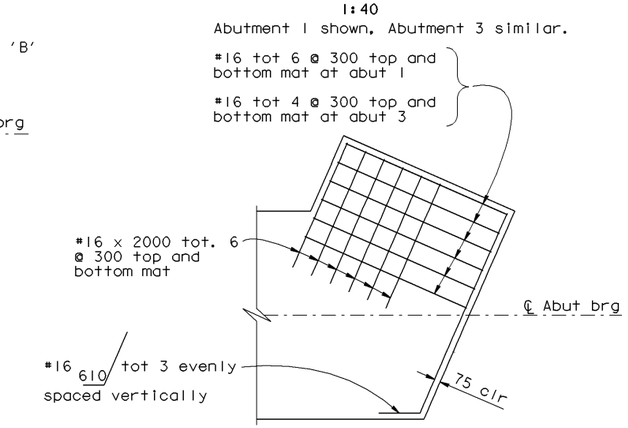

DETAIL B

1:40

Abutment 1 shown, Abutment 3 similar.

ALL DIMENSIONS ARE IN MILLIMETERS UNLESS OTHERWISE SHOWN

LEGEND:

- ☐ - Indicates vertical piles
- ☐ - Indicates battered pile

Note:

1. All reinforcement shown in 'Detail A' and 'Detail B' are in addition to footing reinforcement shown in 'Section A-A' on "Abutment Details No. 1" sheet.
2. For information not shown, see "Retaining Wall Details" sheets.

DESIGN	BY	CHECKED
DETAILS	BY	CHECKED
QUANTITIES	BY	CHECKED

STATE OF CALIFORNIA DEPARTMENT OF TRANSPORTATION

DIVISION OF STRUCTURES STRUCTURE DESIGN

BRIDGE NO.

KILOMETER POST

DIXON LANDING ROAD OC (REPLACE)

ABUTMENT PILE LAYOUT

STRUCTURES DESIGN DETAIL SHEET (METRIC) (REV. 3/1/99)

ORIGINAL SCALE IN MILLIMETERS FOR REDUCED PLANS 0 10 20 30 40 50 60 70 80 90 100

CU 0000
EA 000000

FILE => dpm2_218.dgn

DISREGARD PRINTS BEARING EARLIER REVISION DATES

REVISION DATES (PRELIMINARY STAGE ONLY): 02-28-00 02-28-00 03-14-00 03-28-00 03-21-00 03-28-00 03-30-00 05-26-00 9-13-00

SHEET 7 OF 34

USERNAME => trmikesi DATE PLOTTED => 10-APR-2001 TIME PLOTTED => 09:11

04-02-01

Return to Section 2 Table of Contents

DIST	COUNTY	ROUTE	KILOMETER POST TOTAL PROJECT	SHEET No	TOTAL SHEETS

Caltrans Metric

REGISTERED CIVIL ENGINEER

PLANS APPROVAL DATE

REGISTERED PROFESSIONAL ENGINEER No. Exp. CIVIL STATE OF CALIFORNIA

The State of California or its officers or agents shall not be responsible for the accuracy or completeness of electronic copies of this plan sheet.

Cal-Trans now has a web site! To get to the web site, go to: http://www.dot.ca.gov

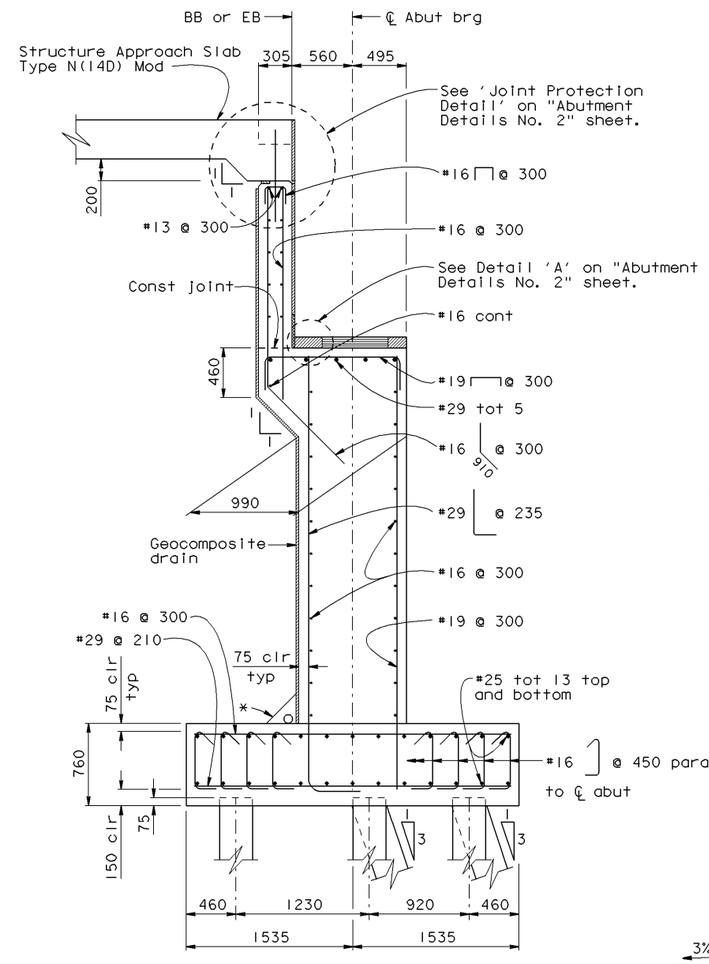

SECTION A-A

1:25

* See "Structure Approach Drainage Details" sheet.

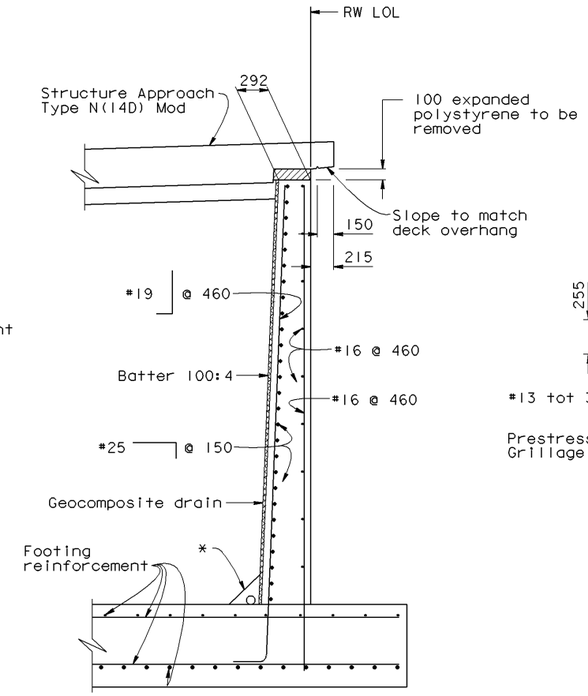

SECTION B-B

1:25

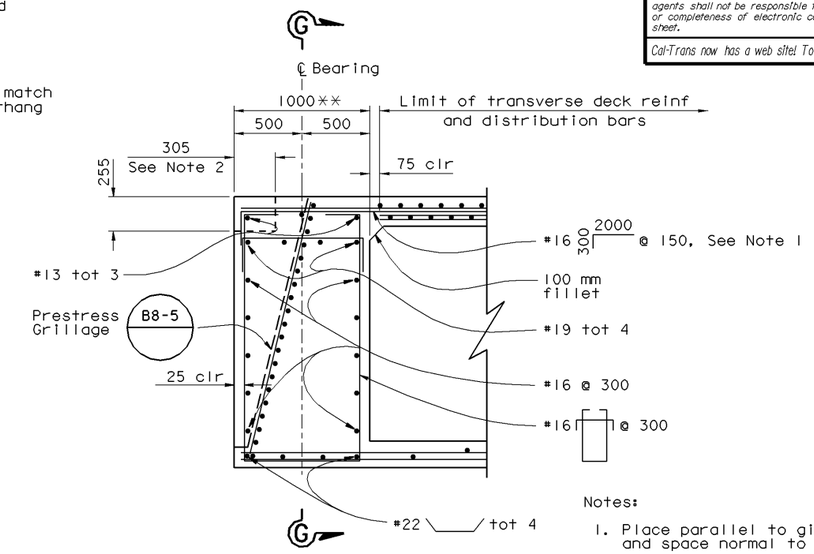

END DIAPHRAGM

1:20

Notes:

1. Place parallel to girders and space normal to ℄ Girders.
2. Reinforcing bars may be adjusted as necessary to accommodate installation of the Joint Seal Assembly upon approval of the Joint Seal Shop Drawings and as directed by The Engineer.

** = Normal to ℄ Abutment

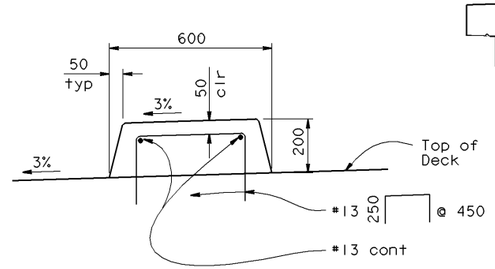

RAISED MEDIAN DETAIL

1:10

Raised median shall be paid as minor concrete (curb). Pay limits shall be from end of sleeper slab to end of sleeper slab.

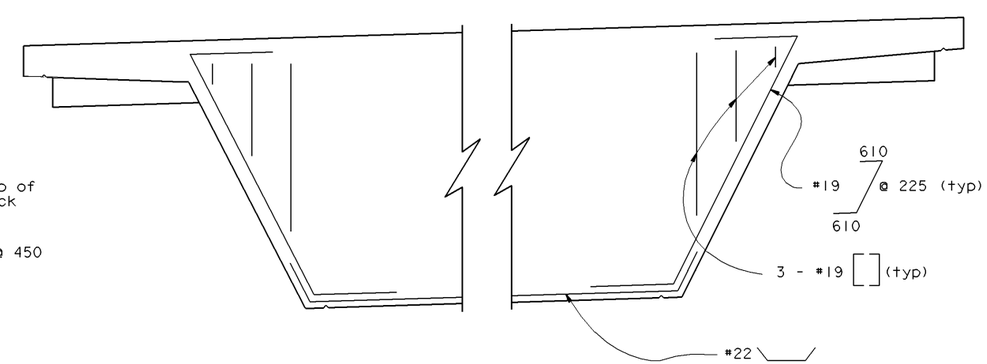

SECTION G-G

1:20

ALL DIMENSIONS ARE IN MILLIMETERS UNLESS OTHERWISE SHOWN

	BY	CHECKED
DESIGN		
DETAILS		
QUANTITIES		

STATE OF CALIFORNIA DEPARTMENT OF TRANSPORTATION

DIVISION OF STRUCTURES STRUCTURE DESIGN

BRIDGE NO.

KILOMETER POST

DIXON LANDING ROAD OC (REPLACE)

ABUTMENT DETAILS NO. 1

STRUCTURES DESIGN DETAIL SHEET (METRIC) (REV. 3/1/99)

ORIGINAL SCALE IN MILLIMETERS FOR REDUCED PLANS 0 10 20 30 40 50 60 70 80 90 100

CU 0000
EA 000000

FILE => dpm2_219.dgn

DISREGARD PRINTS BEARING EARLIER REVISION DATES

REVISION DATES (PRELIMINARY STAGE ONLY) 02-15-00 02-17-00 02-24-00 03-14-00 03-21-00 03-29-00 03-30-00 03-13-00 03-22-00 03-26-00

SHEET 8 OF 34

USERNAME => trmikesl DATE PLOTTED => 10-APR-2001 TIME PLOTTED => 09:11

04-02-01

Return to Section 2 Table of Contents

DIST	COUNTY	ROUTE	KILOMETER POST TOTAL PROJECT	SHEET No	TOTAL SHEETS

Caltrans Metric

REGISTERED CIVIL ENGINEER

PLANS APPROVAL DATE

REGISTERED PROFESSIONAL ENGINEER No. Exp. CIVIL STATE OF CALIFORNIA

The State of California or its officers or agents shall not be responsible for the accuracy or completeness of electronic copies of this plan sheet.

Cal-Trans now has a web site! To get to the web site, go to: http://www.dot.pa.gov

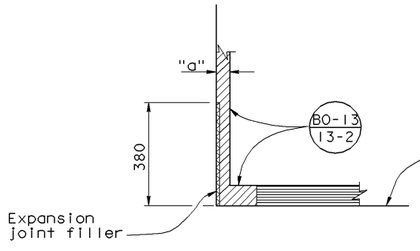

For value of "a" see "Joint Seal Assembly" sheet.

DETAIL "A"
No Scale

For location of 'Detail A', see "Abutment Details No. 1" sheet.

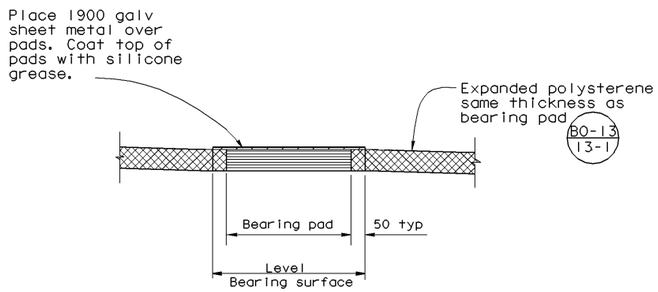

SECTION A-A
No Scale

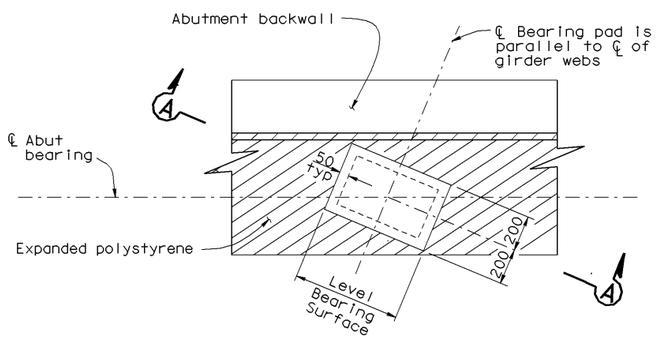

ELASTOMERIC BEARING PAD DETAIL
No Scale

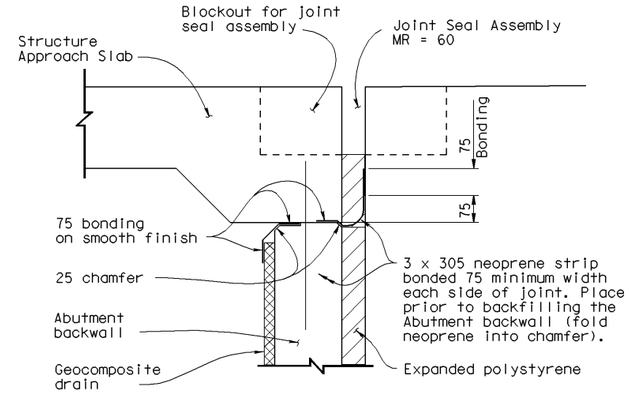

JOINT PROTECTION DETAIL
No Scale

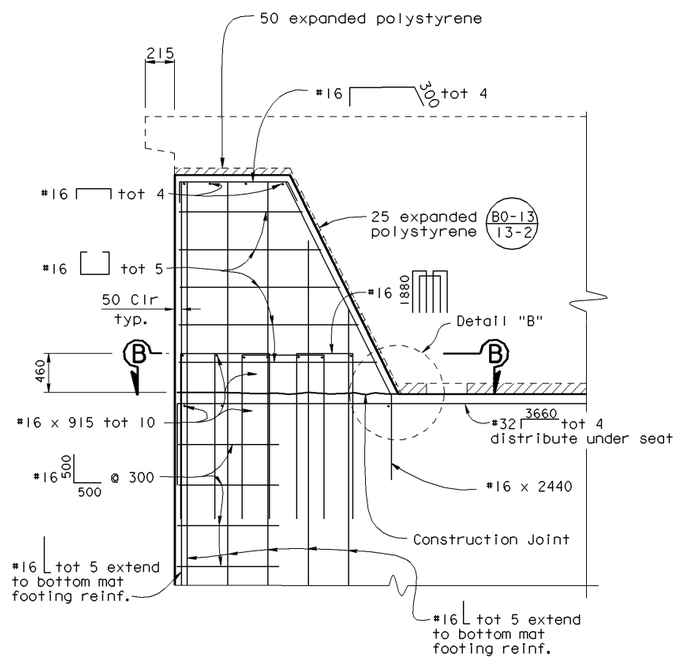

SHEAR KEY DETAIL
No Scale

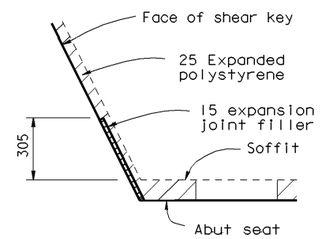

Detail "B"
No Scale

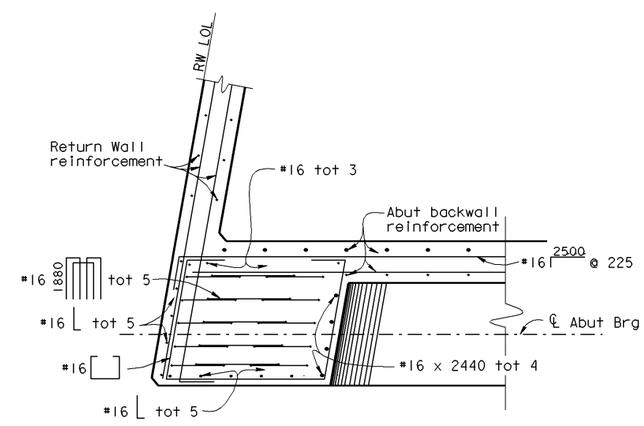

SECTION B-B
No Scale

Right side of abutment 1 shown. Other abutment corners are similar, but with varying skew angles.

ALL DIMENSIONS ARE IN MILLIMETERS UNLESS OTHERWISE SHOWN

DESIGN	BY	CHECKED
DETAILS	BY	CHECKED
QUANTITIES	BY	CHECKED

STATE OF CALIFORNIA
DEPARTMENT OF TRANSPORTATION

DIVISION OF STRUCTURES
STRUCTURE DESIGN

BRIDGE NO.
KILOMETER POST

DIXON LANDING ROAD OC (REPLACE)
ABUTMENT DETAILS NO. 2

STRUCTURES DESIGN DETAIL SHEET (METRIC) (REV. 3/1/99)

ORIGINAL SCALE IN MILLIMETERS FOR REDUCED PLANS 0 10 20 30 40 50 60 70 80 90 100

CU 0000
EA 000000

FILE => dpm2_220.dgn

DISREGARD PRINTS BEARING EARLIER REVISION DATES

REVISION DATES (PRELIMINARY STAGE ONLY) 5-29-00 9-13-00

SHEET 9 OF 34

USERNAME => trmikes1 DATE PLOTTED => 10-APR-2001 TIME PLOTTED => 09:11
04-02-01

Return to Section 2 Table of Contents

DIST	COUNTY	ROUTE	KILOMETER POST TOTAL PROJECT	SHEET No	TOTAL SHEETS

REGISTERED CIVIL ENGINEER

PLANS APPROVAL DATE

REGISTERED PROFESSIONAL ENGINEER No. Exp. CIVIL STATE OF CALIFORNIA

The State of California or its officers or agents shall not be responsible for the accuracy or completeness of electronic copies of this plan sheet.

Caltrans now has a web site! To get to the web site, go to: http://www.dot.ca.gov

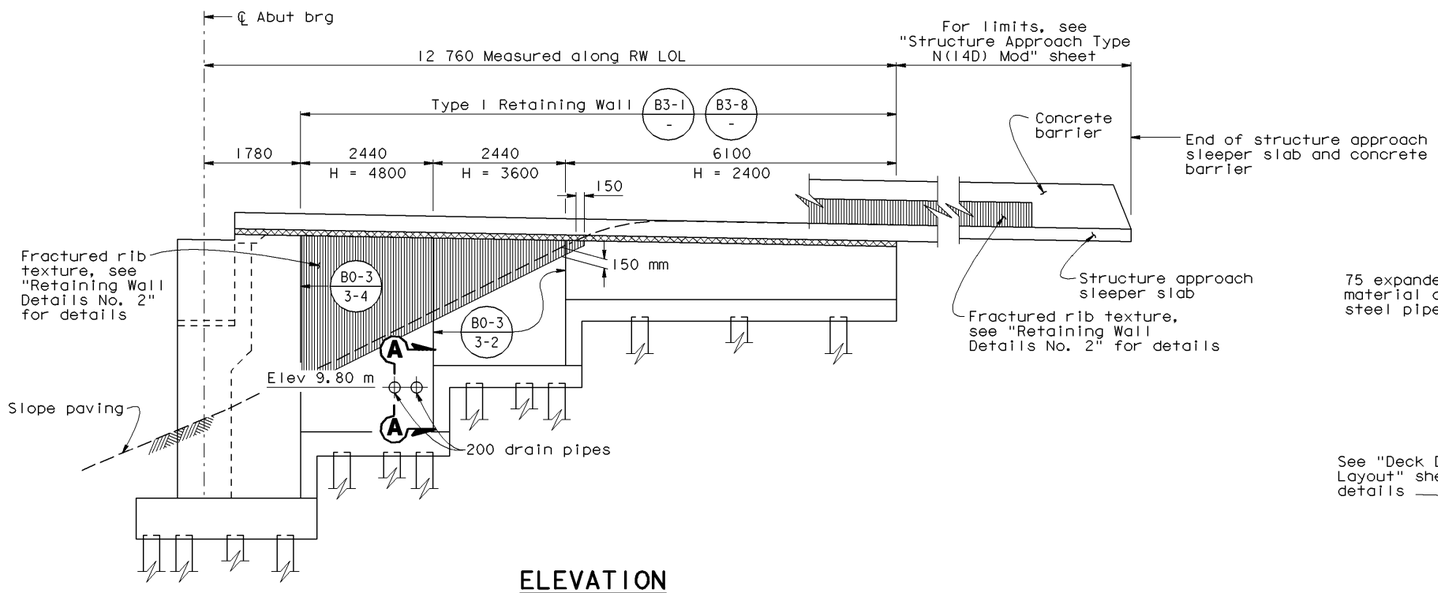

ELEVATION

1:50

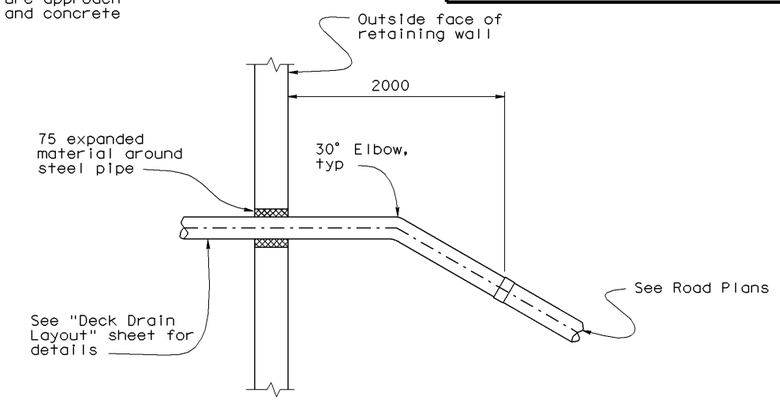

SECTION A-A

NO SCALE

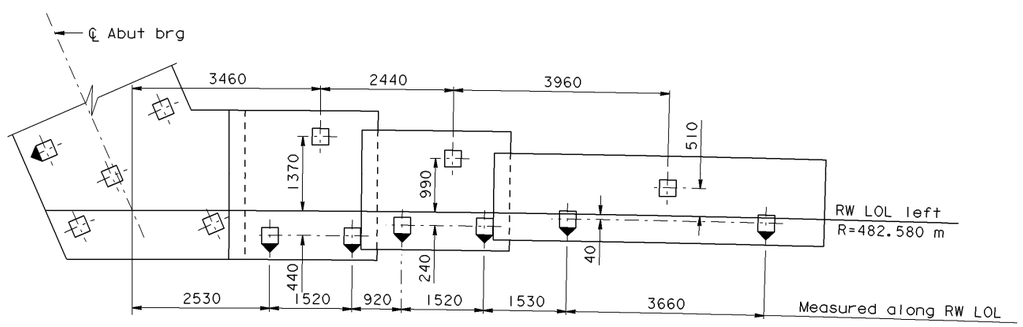

PLAN ABUTMENT 1 (LEFT)

1:50

Notes:

1. For slope paving details, see "Slope Paving-Full Slope" sheet.
2. For structure approach details, see "Structure Approach Type N(14D) Mod" sheet.
3. RW LOL is parallel to 'D' Line.

LEGEND:

- ☐ - Indicates vertical pile
- ⬓ - Indicates battered pile

ALL DIMENSIONS ARE IN MILLIMETERS UNLESS OTHERWISE SHOWN

	BY	CHECKED
DESIGN	BY	CHECKED
DETAILS	BY	CHECKED
QUANTITIES	BY	CHECKED

STATE OF CALIFORNIA
DEPARTMENT OF TRANSPORTATION

DIVISION OF STRUCTURES
STRUCTURE DESIGN

BRIDGE NO.

KILOMETER POST

DIXON LANDING ROAD OC (REPLACE)

RETAINING WALL DETAILS NO. 1

STRUCTURES DESIGN DETAIL SHEET (METRIC) (REV. 3/1/99)

ORIGINAL SCALE IN MILLIMETERS FOR REDUCED PLANS 0 10 20 30 40 50 60 70 80 90 100

CU 0000
EA 000000

FILE => dpm2_221.dgn

DISREGARD PRINTS BEARING EARLIER REVISION DATES

REVISION DATES (PRELIMINARY STAGE ONLY): 02-15-00 03-10-00 03-21-00 03-29-00 05-25-00 05-30-00 09-13-00

SHEET 10 OF 34

USERNAME => trmikesl DATE PLOTTED => 10-APR-2001 TIME PLOTTED => 09:12

04-02-01

Return to Section 2 Table of Contents

DIST	COUNTY	ROUTE	KILOMETER POST TOTAL PROJECT	SHEET No	TOTAL SHEETS

Caltrans Metric

REGISTERED CIVIL ENGINEER

PLANS APPROVAL DATE

REGISTERED PROFESSIONAL ENGINEER No. Exp. CIVIL STATE OF CALIFORNIA

The State of California or its officers or agents shall not be responsible for the accuracy or completeness of electronic copies of this plan sheet.

Caltrans now has a web site! To get to the web site, go to: http://www.dot.ca.gov

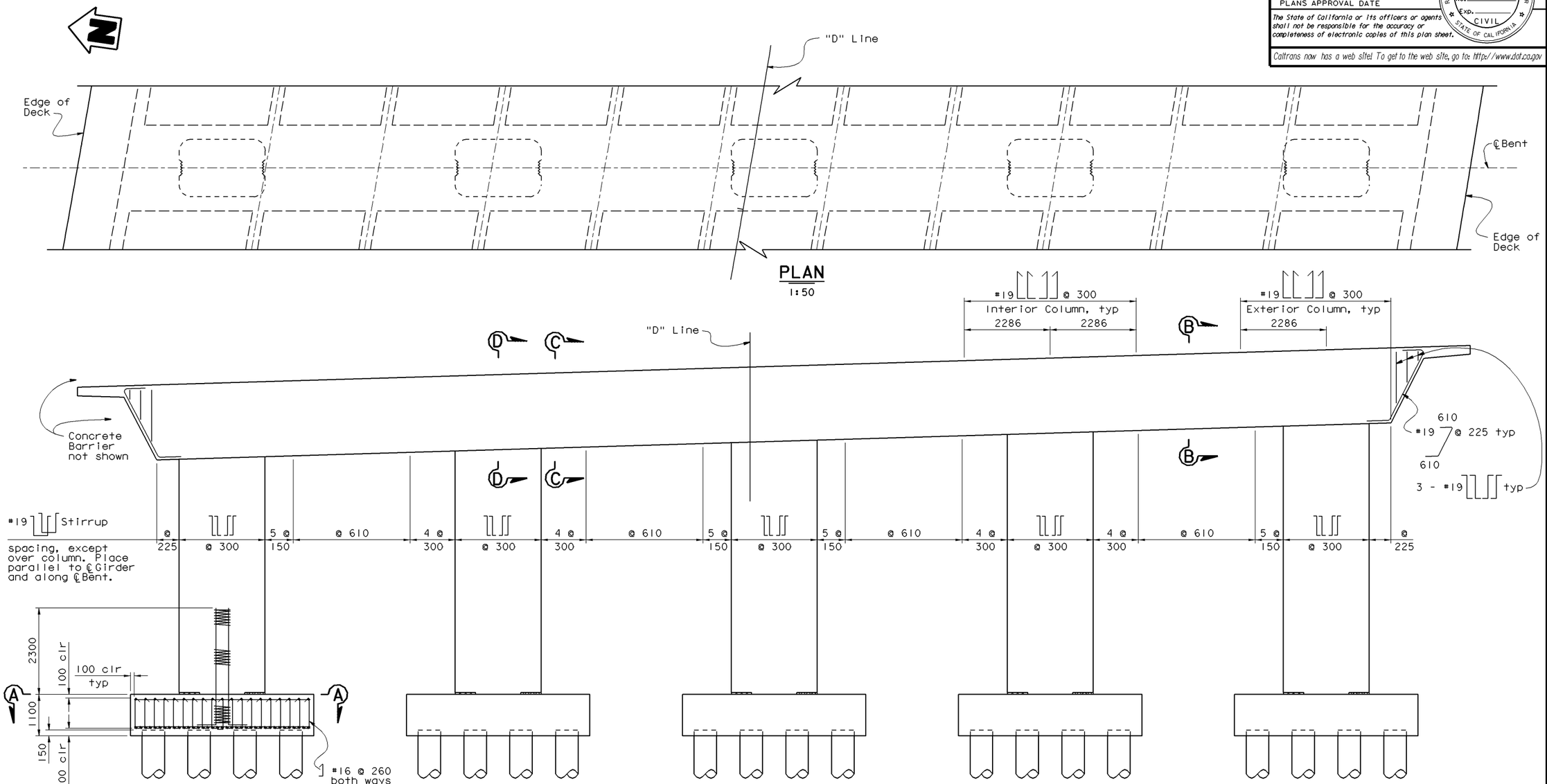

Notes:
For "Section A-A, B-B, C-C, and D-D", see "Bent Details No.2" sheet.

ALL DIMENSIONS ARE IN MILLIMETERS UNLESS OTHERWISE SHOWN

DESIGN	BY	CHECKED	
DETAILS	BY	CHECKED	
QUANTITIES	BY	CHECKED	

STATE OF CALIFORNIA
DEPARTMENT OF TRANSPORTATION

DIVISION OF STRUCTURES
STRUCTURE DESIGN

BRIDGE NO.
KILOMETER POST

DIXON LANDING ROAD OC (REPLACE)

BENT DETAILS NO. 1

STRUCTURES DESIGN DETAIL SHEET (METRIC) (REV. 1/1/99)

ORIGINAL SCALE IN MILLIMETERS FOR REDUCED PLANS 0 10 20 30 40 50 60 70 80 90 100

CU 0000
EA 000000

FILE => dpm2_222.dgn

DISREGARD PRINTS BEARING EARLIER REVISION DATES

REVISION DATES (PRELIMINARY STAGE ONLY) 03-24-00 05-09-00 09-14-00

SHEET 13 OF 35

USERNAME => trmikesl DATE PLOTTED => 10-APR-2001 TIME PLOTTED => 09:12

04-02-01

Return to Section 2 Table of Contents

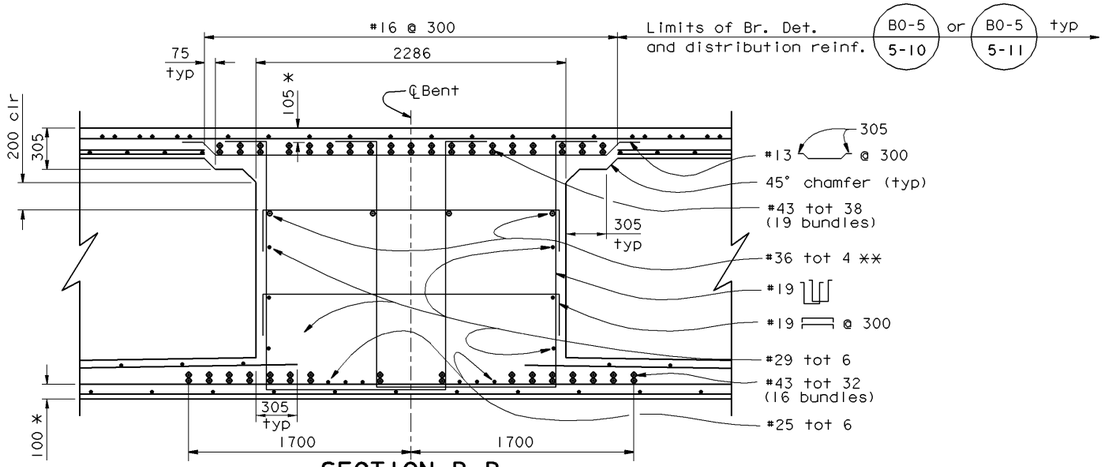

SECTION B-B

1:20

Notes:

* = Clearance to Main Cap Reinforcement

** = Reinforcement may be bent or lowered to clear P/S Ducts.

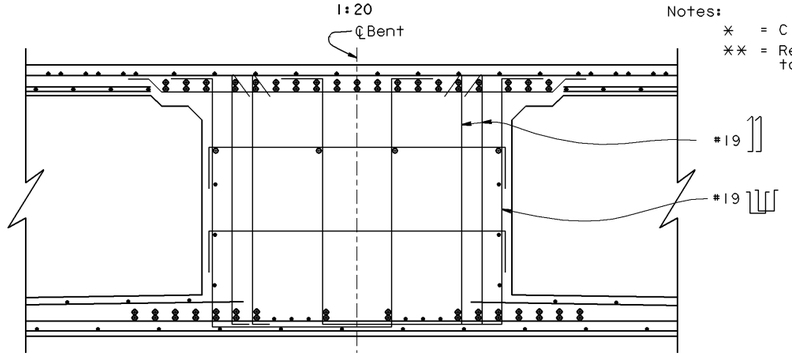

SECTION C-C

1:20

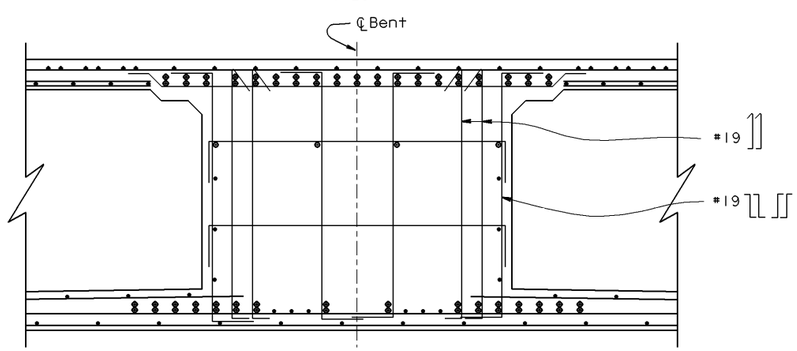

SECTION D-D

1:20

Note:
For notes or details not shown, see "Section B-B"

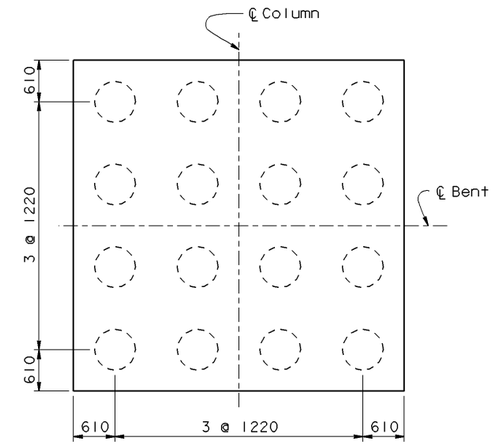

PILE LAYOUT (TYP)

1:40

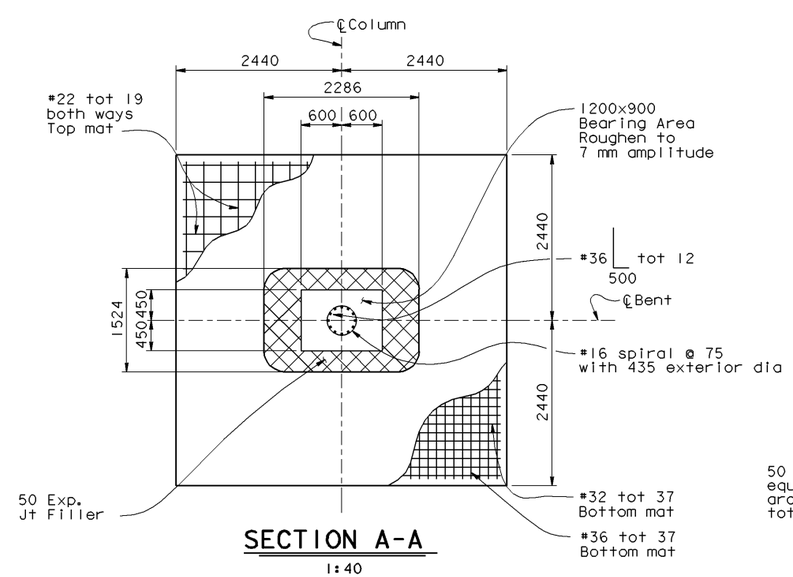

SECTION A-A

1:40

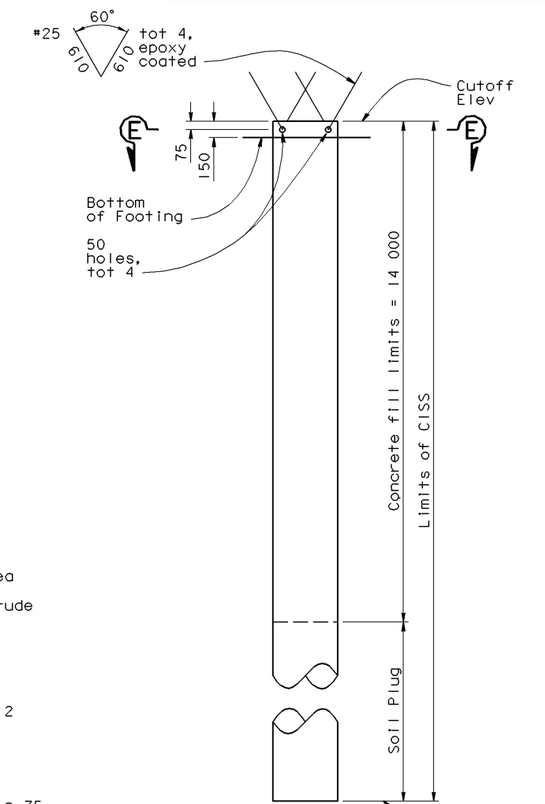

PILE DETAIL

1:25

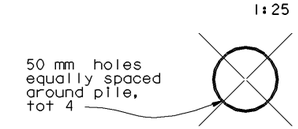

SECTION E-E

1:25

ALL DIMENSIONS ARE IN MILLIMETERS UNLESS OTHERWISE SHOWN

DIST	COUNTY	ROUTE	KILOMETER POST TOTAL PROJECT	SHEET No	TOTAL SHEETS

Caltrans Metric

REGISTERED CIVIL ENGINEER

PLANS APPROVAL DATE

REGISTERED PROFESSIONAL ENGINEER No. Exp. CIVIL STATE OF CALIFORNIA

The State of California or its officers or agents shall not be responsible for the accuracy or completeness of electronic copies of this plan sheet.

Caltrans now has a web site! To get to the web site, go to: http://www.dot.ca.gov

	BY	CHECKED
DESIGN	BY	CHECKED
DETAILS	BY	CHECKED
QUANTITIES	BY	CHECKED

STATE OF CALIFORNIA
DEPARTMENT OF TRANSPORTATION

DIVISION OF STRUCTURES
STRUCTURE DESIGN

BRIDGE NO.
KILOMETER POST

DIXON LANDING ROAD OC (REPLACE)

BENT DETAILS NO. 2

STRUCTURES DESIGN DETAIL SHEET (METRIC) (REV. 3/1/99)

ORIGINAL SCALE IN MILLIMETERS FOR REDUCED PLANS 0 10 20 30 40 50 60 70 80 90 100

CU 0000
EA 000000

DISREGARD PRINTS BEARING EARLIER REVISION DATES

REVISION DATES (PRELIMINARY STAGE ONLY) 03-29-00 05-10-00 09-14-00

SHEET 14 OF 34

FILE => dpm2_223.dgn

USERNAME => trmikesl DATE PLOTTED => 10-APR-2001 TIME PLOTTED => 09:12

04-02-01

Return to Section 2 Table of Contents

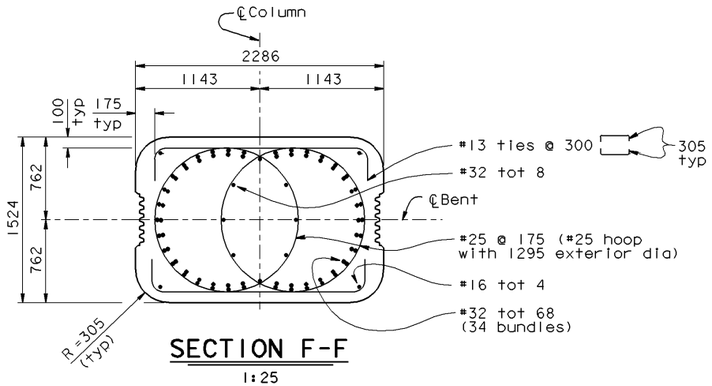

SECTION F-F

1:25

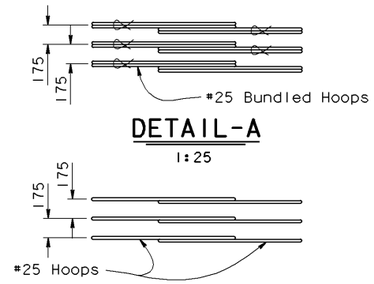

DETAIL-A

1:25

DETAIL-B

1:25

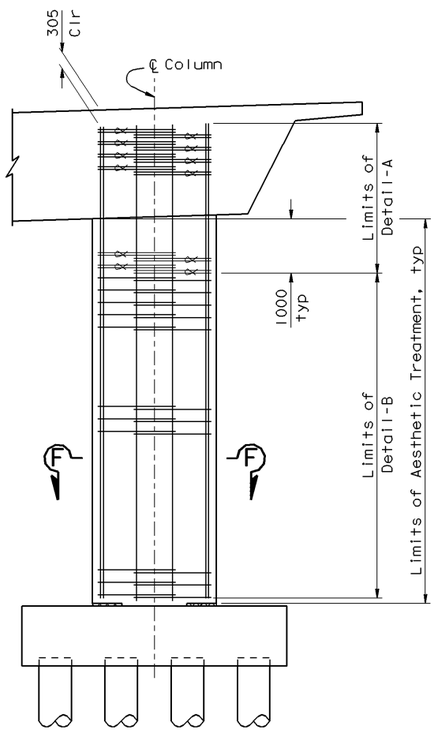

COLUMN DETAIL

1:50

Notes:

A. Splices of Main Column Reinforcement are not permitted.

B. All hoops shall be butt splice.

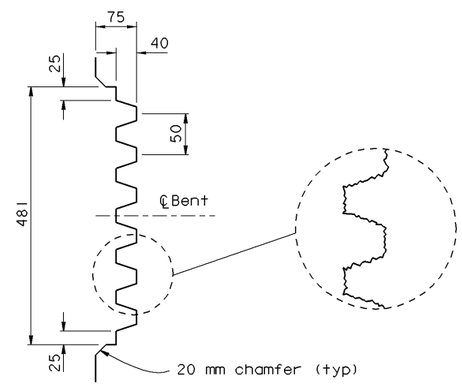

TYPICAL AESTHETIC TREATMENT (FRACTURED RIB)

1:5

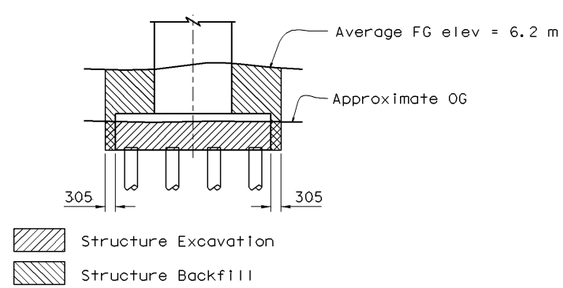

LIMITS OF EXCAVATION AND BACKFILL

1:80

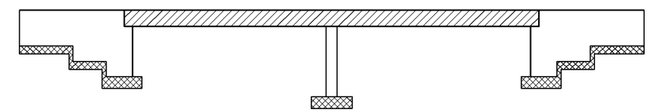

Structural Concrete, Bridge (28 MPa at 28 days)

Structural Concrete, Bridge Footing (28 MPa at 28 days)

Structural Concrete, Bridge (35 MPa at 28 days)

CONCRETE STRENGTH AND TYPE LIMITS

No Scale

ALL DIMENSIONS ARE IN MILLIMETERS UNLESS OTHERWISE SHOWN

DIST	COUNTY	ROUTE	KILOMETER POST TOTAL PROJECT	SHEET No	TOTAL SHEETS

REGISTERED CIVIL ENGINEER

PLANS APPROVAL DATE

REGISTERED PROFESSIONAL ENGINEER No. Exp. CIVIL STATE OF CALIFORNIA

The State of California or its officers or agents shall not be responsible for the accuracy or completeness of electronic copies of this plan sheet.

Caltrans now has a web site! To get to the web site, go to: http://www.dot.ca.gov

DESIGN	BY	CHECKED	
DETAILS	BY	CHECKED	
QUANTITIES	BY	CHECKED	

STATE OF CALIFORNIA DEPARTMENT OF TRANSPORTATION

DIVISION OF STRUCTURES STRUCTURE DESIGN

BRIDGE NO.

KILOMETER POST

DIXON LANDING ROAD OC (REPLACE)

BENT DETAILS NO. 3

STRUCTURES DESIGN DETAIL SHEET (METRIC) (REV. 3/1/99)

ORIGINAL SCALE IN MILLIMETERS FOR REDUCED PLANS 0 10 20 30 40 50 60 70 80 90 100

CU 0000
EA 000000

FILE => dpm2_224.dgn

DISREGARD PRINTS BEARING EARLIER REVISION DATES 03-29-00 09-14-00

REVISION DATES (PRELIMINARY STAGE ONLY)

SHEET 15 OF 34

USERNAME => trmirkes! DATE PLOTTED => 10-APR-2001 TIME PLOTTED => 09:12

04-02-01

Return to Section 2 Table of Contents

ANTICIPATED UTILITY OPENING

No.	Description
①	100 ∅ Milpitas Traffic Utility
②⑦	Opening for ACWD Utility
③⑧	Opening for Milpitas Utility
④⑥	Openinig for Milpitas and Pac Bell
⑤	Opening for PG&E

Note:
Dimension from soffit to utility opening applicable to all bent cap, end diaphrams, and abutment backwalls.

B7-10

Caltrans Metric

DIST.	COUNTY	ROUTE	KILOMETER POST TOTAL PROJECT	SHEET NO.	TOTAL SHEETS

REGISTERED ENGINEER - CIVIL

PLANS APPROVAL DATE

REGISTERED PROFESSIONAL ENGINEER No. Exp. CIVIL STATE OF CALIFORNIA

The State of California or its officers or agents shall not be responsible for the accuracy or completeness of electronic copies of this plan sheet.

Caltrans now has a web site! To get to the web site, go to: http://www.dot.ca.gov

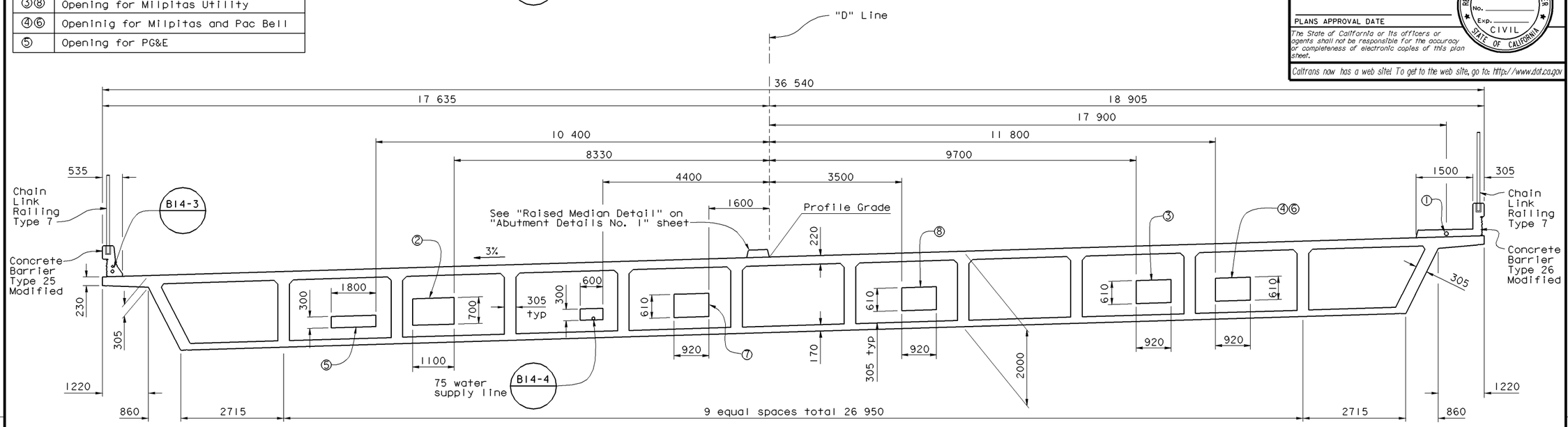

TYPICAL SECTION

1:20

B11-52 B11-53 B11-54

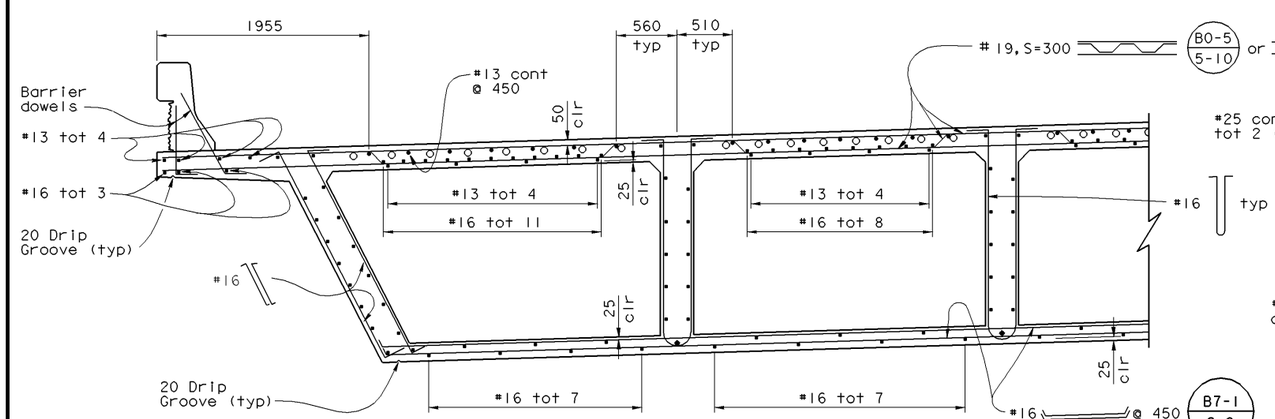

PART TYPICAL SECTION - LEFT

1:40

B7-1

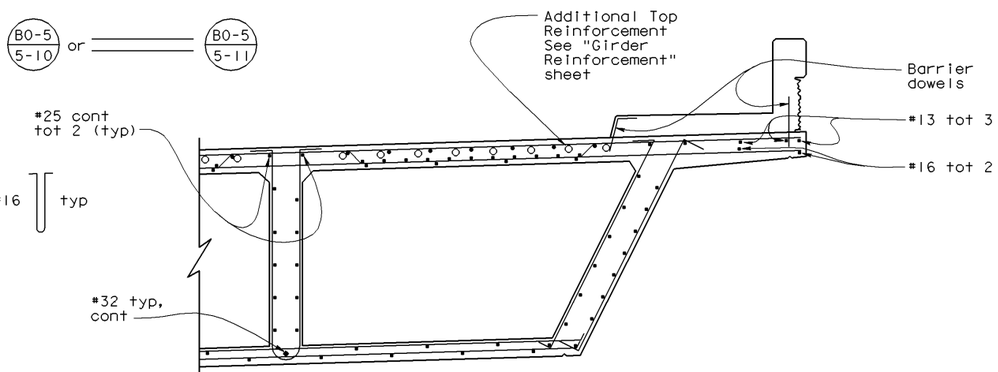

PART TYPICAL SECTION - RIGHT

1:40

ALL DIMENSIONS ARE IN MILLIMETERS UNLESS OTHERWISE SHOWN

DESIGN	BY	CHECKED	
DETAILS	BY	CHECKED	
QUANTITIES	BY	CHECKED	

STATE OF CALIFORNIA
DEPARTMENT OF TRANSPORTATION

DIVISION OF STRUCTURES
STRUCTURE DESIGN

BRIDGE NO.

KILOMETER POST

DIXON LANDING ROAD OC (REPLACE)

TYPICAL SECTION

STRUCTURES DESIGN DETAIL SHEET (METRIC) (REV. 7/29/97)

ORIGINAL SCALE IN MILLIMETERS FOR REDUCED PLANS 0 10 20 30 40 50 60 70 80 90 100

CU 0000
EA 000000

FILE => dpm2_225.dgn

DISREGARD PRINTS BEARING EARLIER REVISION DATES

REVISION DATES (PRELIMINARY STAGE ONLY) 03-30-00 03-24-00 05-18-00 05-26-00 09-14-00 09-22-00

SHEET 16 OF 34

USERNAME => trmikesi DATE PLOTTED => 10-APR-2001 TIME PLOTTED => 09:12

04-02-01

Return to Section 2 Table of Contents

DIST	COUNTY	ROUTE	KILOMETER POST TOTAL PROJECT	SHEET No	TOTAL SHEETS

Caltrans Metric

REGISTERED CIVIL ENGINEER

PLANS APPROVAL DATE

REGISTERED PROFESSIONAL ENGINEER No. Exp. CIVIL STATE OF CALIFORNIA

The State of California or its officers or agents shall not be responsible for the accuracy or completeness of electronic copies of this plan sheet.

Cal-Trans now has a web site! To get to the web site, go to: http://www.dot.ca.gov

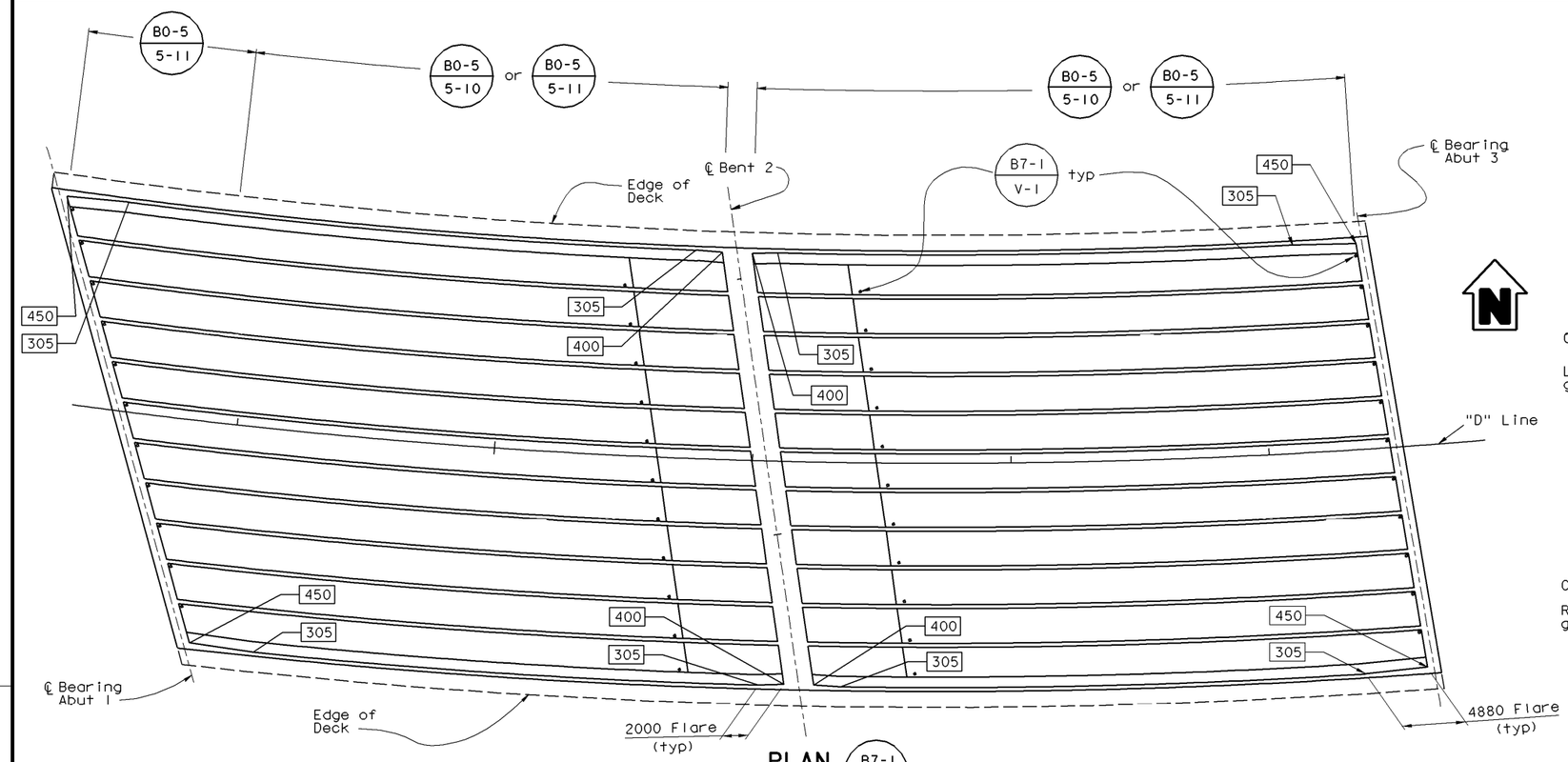

PLAN (B7-1)

1:200

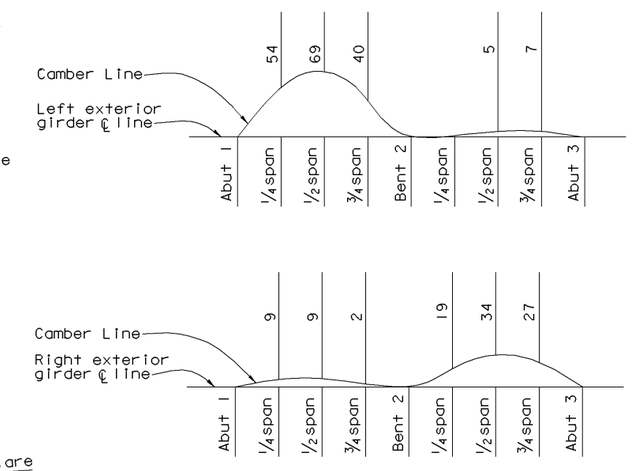

CAMBER DIAGRAM

No Scale

Does not include allowance for falsework settlement. Camber values shall vary linearly from left exterior girder to right exterior girder.

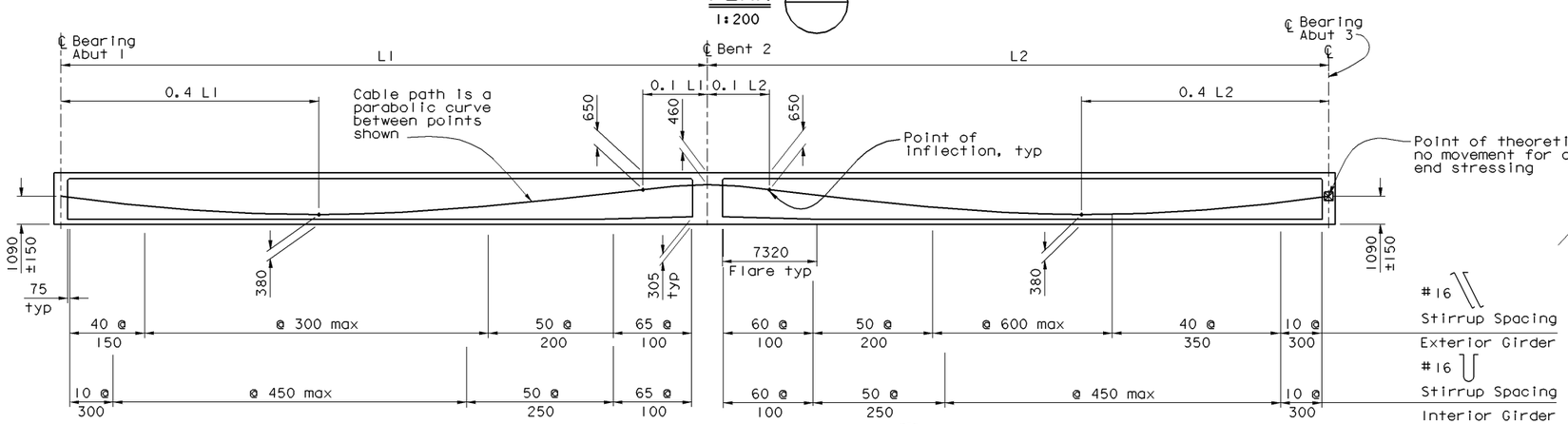

LONGITUDINAL SECTION (B8-5)

No Scale

Notes:

indicates girder stem width in millimeters

1. Transverse reinforcement in B0-5 / 5-10 and B0-5 / 5-11 may be placed perpendicular to girder ℄ s or as approved by Engineer.
2. See "Prestressing Notes" on "Deck Contours" sheet.

ALL DIMENSIONS ARE IN MILLIMETERS UNLESS OTHERWISE SHOWN

DESIGN	BY	CHECKED	
DETAILS	BY	CHECKED	
QUANTITIES	BY	CHECKED	

STATE OF CALIFORNIA DEPARTMENT OF TRANSPORTATION

DIVISION OF STRUCTURES STRUCTURE DESIGN

BRIDGE NO.

KILOMETER POST

DIXON LANDING ROAD OC (REPLACE)

GIRDER LAYOUT

STRUCTURES DESIGN DETAIL SHEET (METRIC) (REV. 9/2/98)

ORIGINAL SCALE IN MILLIMETERS FOR REDUCED PLANS 0 10 20 30 40 50 60 70 80 90 100

CU 0000
EA 000000

FILE => dpm2_226.dgn

DISREGARD PRINTS BEARING EARLIER REVISION DATES

REVISION DATES (PRELIMINARY STAGE ONLY) 03-24-00 05-10-00 09-14-00

SHEET 17 OF 34

USERNAME => tmikes1 DATE PLOTTED => 10-APR-2001 TIME PLOTTED => 09:12

04-02-01

Return to Section 2 Table of Contents

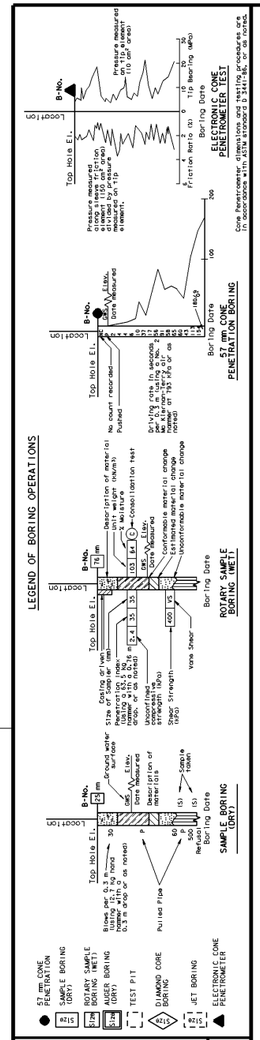

BENCH MARK

BM HV3 Elev. 4.159 m, NAVD 88'
Nail in SB shoulder Rte. 880, 16.17 m Lt. Sta. 105.657 "A" C/L Rte. 880

NOTES:

1. qu=unconfined compressive strength, kPa, measured by pocket penetrometer-field test.
2. Su= Shear strength, kPa, measured by Torr Vane-field test.
3. Ground water surface not measured.

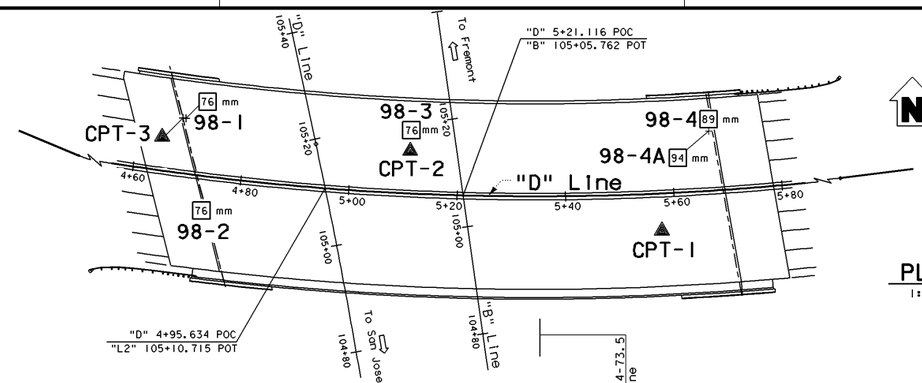

PLAN

1:500

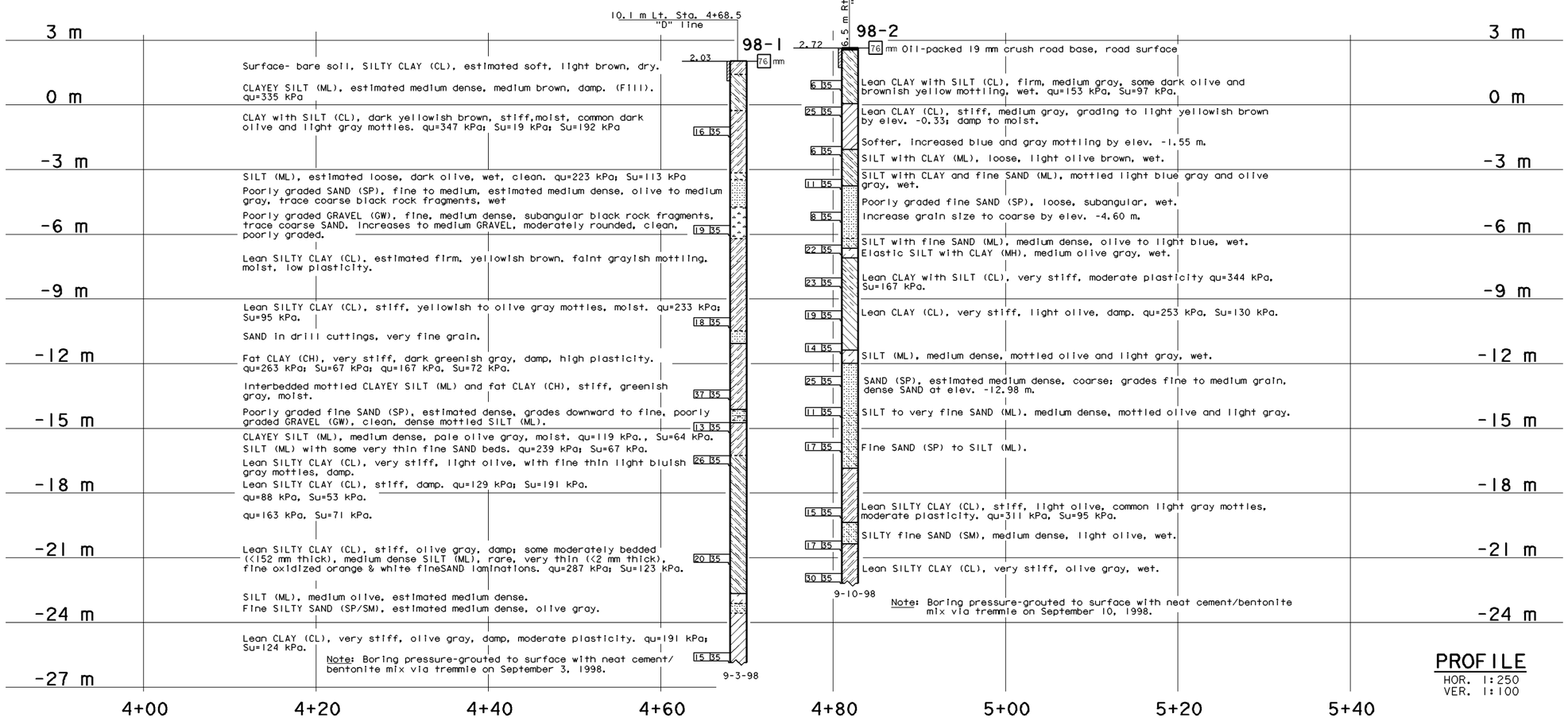

PROFILE

HOR. 1:250
VER. 1:100

DIST.	COUNTY	ROUTE	KILOMETER POST TOTAL PROJECT	SHEET NO.	TOTAL SHEETS

REGISTERED GEOLOGIST

PLANS APPROVAL DATE

The State of California or its officers or agents shall not be responsible for the accuracy or completeness of electronic copies of this plan sheet.

REGISTERED GEOLOGIST No. Exp. STATE OF CALIFORNIA

Caltrans now has a web site! To get to the web site, go to: http://www.dot.ca.gov

ENGINEERING SERVICE CENTER	STRUCTURE FOUNDATIONS	FIELD INVESTIGATION BY:	STATE OF CALIFORNIA DEPARTMENT OF TRANSPORTATION	DIVISION OF STRUCTURES STRUCTURE DESIGN	BRIDGE NO.	DIXON LANDING ROAD OC (REPLACE)
DRAWN BY					KILOMETER POST	LOG OF TEST BORINGS 1 OF 8
CHECKED BY						

OSF GEOLOGIST LOG OF TEST BORINGS SHEET (METRIC) (REV. 11/18/97)

ORIGINAL SCALE IN MILLIMETERS FOR REDUCED PLANS 0 10 20 30 40 50 60 70 80 90 100

CU 0000
EA 000000

FILE => dpm2_227.dgn

DISREGARD PRINTS BEARING EARLIER REVISION DATES

REVISION DATES (PRELIMINARY STAGE ONLY): 3-8-99 3-26-99 4-2-99 4-21-99 4-4-2000 9-13-00

SHEET 27 OF 34

USERNAME => trmikesl DATE PLOTTED => 10-APR-2001 TIME PLOTTED => 09:12

04-02-01

Return to Section 2 Table of Contents

Return to Section 2 Table of Contents

(Blank)

2-2.25 Cross Sections (Roadway)

Cross sections are no longer being considered part of the contract documents for Caltrans contracts. They are considered supplemental information included for the convenience of bidders and the Resident Engineer.

Where sufficient information is included in the plans via typical cross sections, profile gradient information, earthwork tabulations, superelevation diagrams, contour grading plans, pavement elevations, or combinations thereof, cross sections will not normally be made available to bidders.

Where cross sections were prepared to assist in the design of a project, bidders will be notified in the "Notice to Contractors" that such cross sections will be available for inspection through the District Office of the district in which the project is located. Copies of the cross sections will be made available to the bidders at the bidder's expense through the District Office.

Return to Section 2 Table of Contents, page 2-95

2-3 AS BUILT PLANS

2-3.1 GENERAL

"As Built" plans are the original project plan sheets which have been updated showing construction phase changes. "As Built" plans may be used as base information to prepare proposed project plans and as such should reflect all changes made during construction. Refer to "Metric Plan Dimensioning" in Section 2-1.3 of this manual.

Except for certain projects that do not have a State representative on construction, districts will be responsible for all "As Built" road plans, and the Office of Structures Design will be responsible for all "As Built" structure plans.

Immediately after a contract is awarded, Headquarters Microfilm Services unit will microfilm the original project plans and distribute the originals and microfilm as follows:

1. The original project plan sheet of all road plans (full size prints of the electronic bid set of roadway plans) will be forwarded to the district for record purposes.

2. The original project plan sheets of all sheets with "Structure" signature blocks will be forwarded to the Office of Structures Design.

3. The original microfilm of the plans (in roll form) will go to the Department's security file.

All electronic files in DES-OE for a particular project are deleted immediately after the District and/or Structures has verified receipt of the complete and correct electronic project files as advertised from DES-OE. The original electronic files may be retained in the District or Structures to be used for "As Built" plans.

The district shall maintain the set of original road plan sheets. Prints shall be made of each sheet of the original plans and furnished to the Resident Engineer by the district.

Each sheet of the prints, which are to be used for "As Builts", should be clearly identified as such. All sheets upon which changes are made must contain the name of the Resident Engineer or structures representative. Most districts use rubber stamps for "As Built" identification.

Field changes shall be made to prints by the Resident Engineer, and afterwards transferred to the original plan sheets in the district office so that they then become the "As Built" originals.

2-3.2 Preparation Procedures (Roadway)

Each sheet of the original project plans must be identified as "As Built" when data is transferred from the prints, and the name of the Resident Engineer or structures representative included thereon.

Changes shall be transferred to the original project plan sheets in red ink if manually drafted and in contrasting (slant or italics) text if computer drafted. When the electronic file is used to record changes during construction, revisions are noted by lining out the original information shown on various levels and inserting the "As Built" information on Level 62. The electronic signature and seal of the responsible registered engineer (Resident Engineer or Construction Engineer) is placed in the file on Level 62. The changes shall be transferred in such manner that they will produce good quality microfilm. Original data that is superseded shall be lined out and still remain legible. Do not eradicate original figures or make corrections over them. All lettering must be clear and legible. Lettering shall conform to Section 1-2.2 of this manual. Extensive changes that cannot be made clearly on the original plan sheet should be made on a new supplemental sheet. The new sheet shall be signed by the responsible registered engineer (Resident Engineer or Construction Engineer) and included with the "As Built" originals. All supplemental sheets shall be direct reading and of a quality which will produce good microfilm.

Return to Section 2 Table of Contents, page 2-21

In order to attain uniformity in final road plans, the following data should be shown on "As Built" plans:

1. Contract order number when the change is made under this procedure.
2. Revision in alignment and right of way.
3. Grade revisions in excess of 30 mm.
4. Changes in length, size, flow line elevations, and station of culverts. When alternate types of culverts are permitted, show which alternate was used.
5. Drainage changes.
6. Location of sewers, conduits, and other features.
7. Location of monuments, bench marks, freeway fences, or gates added or revised during the contract.
8. Revision of typical sections.
9. Change in pavement lanes, tapers, ramps, frontage roads, road connections, driveways, sidewalks, islands, and median openings.
10. Curb and gutter changes.
11. Electrical conduits, pull boxes, and service points.
12. Revision in location of utility crossings made during the contract.

Do not show the following on "As Built" plans:

1. Construction quantities.
2. Property fences.
3. Miscellaneous small features, such as guide posts, which are readily changed by maintenance forces.

When a project is completed, the district shall forward a print of the "As Built" file of the road plans to Headquarters Microfilm Services. A microfilm set of the "As Built" plans is made for Department archives. Forward all sheets, including those with no construction changes. The "As Built" plans shall be forwarded as soon as possible after completion of the contract. The prints from which the "As Built" changes were made shall become the district's copy of the plans until such time as the microfilm (aperture cards) and the original "As Built" plans (if requested by the district) are returned from Microfilm Services. The prints can then be destroyed.

2-3.3 Preparation Procedures (Bridges and Structures)

For information concerning these procedures, see Section 3-05-3 of the Construction Manual.

2-3.4 Projects Not On State Highways

For information concerning this topic, see Section 3-05-4 of the Construction Manual.

Return to Section 2 Table of Contents

TABLE OF CONTENTS

SECTION **PAGE NO.**

3-1. INTRODUCTION 3-1
3-1.1 General 3-1
3-1.2 Maps 3-1
3-1.3 Photogrammetric Maps 3-1
3-1.4 Working Drawings 3-2
3-1.5 Plans 3-2

3-2. MAPS AND EXHIBITS - SPECIFIC DATA 3-2
3-2.1 General 3-2
3-2.2 Route Adoption Map 3-2
3-2.3 Strip Map 3-4
3-2.4 Freeway/Controlled Access Highway Agreement Exhibits 3-4
3-2.5 New Public Road Connection Request 3-5
3-2.6 PUC Exhibit 3-5

3-3. BRIDGE SITE MAPS 3-7

FIGURES

Figure 3-1.3A Photogrammetric Map 3-9
Figure 3-2.2A Route Adoption Freeway 3-10
Figure 3-2.2B Route Adoption Controlled Access Highway 3-11
Figure 3-2.2C Route Adoption Conventional Highway 3-12
Figure 3-2.2D Route Redesignation 3-13
Figure 3-2.3A Route Adoption Area of Interest Map 3-14
Figure 3-2.4A Freeway Agreement Geometric 3-15
Figure 3-2.4B Freeway Agreement Symbol 3-16
Figure 3-2.4C Freeway Agreement Symbol 2 3-17
Figure 3-2.5A New Public Road Connection Area of Interest Map 3-18

Return to Main Table of Contents

Preliminary Project Development Drawings

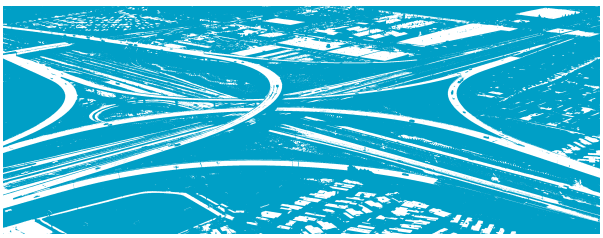

3-1 INTRODUCTION

3-1.1 General

This Section deals with various drawings which are prepared during the development of a project. Each drawing has a definite use, which dictates its minimum content. The uses and minimum contents are described and illustrated by examples.

Frequently, the same basic drawing can be used to meet the needs of several specific drawings by the addition of appropriate notes, titles, and a minimum of delineation. Suggestions along these lines are included in the discussion of the various preliminary project development drawings which follow.

3-1.2 Maps

A map is a graphic representation to a definite scale of the existing features of the earth's surface. These features consist of essentially two things - relief and planimetry.

Relief is normally shown by contours or spot elevations. A map showing only relief is a "hypsographic map".

Planimetry is a representation of man made culture and natural features. A map showing only planimetric features (not relief) is a "planimetry map". A map depicting both relief and planimetry is "topographic map".

A map showing primarily the extent of property ownership, areas, definition of boundaries, and corners is a "cadastral map". In the California Department of Transportation (Caltrans) such maps are commonly referred to as right of way maps.

Maps serve as means of locating, recording, and referring to planimetric, hypsographic, or topographic features. They are a medium for studying, planning, and designing improvements or replacements to existing facilities.

3-1.3 Photogrammetric Maps

On all projects, consideration should be given to maps produced by photogrammetric methods.

In the California Department of Transportation, these maps are used for design, planning, and specialized projects.

TABLE 3-1

PURPOSE	SCALE	CONTOUR INTERVAL
Design	1:200 1:500 1:1000	0.25 m 0.5 m 1 m
Planning	1:2000 1:5000	2 m 5 m
Specialized Projects	1:100 1:5000	0.25 m 5 m +

Photogrammetric map scales and contours intervals vary widely. Table 3-1 indicates the most commonly used scales and contours intervals on maps.

Photogrammetric map content may also differ as indicated in Section 3-1.2. Features, such as cultural (man made), hypsographic (contours and elevation information), hydrographic (water), vegetation (trees, brush orchards, etc.), etc., may be omitted or added depending on the particular map requirements.

Return to Section 3 Table of Contents, page 1-1

Photogrammetric maps may be utilized for reports, working drawings, project plans, etc.

For further information concerning the use of photogrammetric maps contact your District Photogrammetry Coordinator or the Office of Geometronics.

Standard Plan A10B and the Caltrans CADD Cell Library contain the standard symbols used for design mapping by photogrammetric methods.

For a sample of a Photogrammetric Map, see Figure 3-1.3A at the end of this Section.

3-1.4 Working Drawings

A working drawing is a picture or sketch depicting in graphic form the studies, trials, and designs of a project. Working drawings are generally produced by computer automated drafting machines, or by means of instruments and to various degrees of accuracy according to their intended uses. Generally, a working drawing serves as an intermediate process or tool in arriving at a final product. Examples of working drawing are geometric approval drawings and bridge site maps.

3-1.5 Plans

A plan is a working drawing showing a design in its final form. Project plans are the product of all the preliminary planning and designing which previously appeared on various maps and drawings.

Project plans are discussed in Section 2 of this manual.

3-2 MAPS AND EXHIBITS - SPECIFIC DATA

3-2.1 General

Preliminary project development drawings are typically developed at a scale of 1:2000 or smaller. They are used extensively to show the relationship of a project to the surrounding road and street system and to study various alternate geometric designs for a project.

There are numerous sources of mapping for use in preparing project development drawings. Frequently, the same base map can be used to develop several of the drawings described in this Section. This requires careful selection of the base map.

Transportation System Information Program personnel maintain the County Road System mapping. These are planimetric maps. Duplicates of these maps can be used as base mapping for several of the drawings discussed in this Section.

3-2.2 Route Adoption Map

(1) General

The purpose of the Route Adoption Map is to document the location and designation of a highway route that has been approved by the California Transportation Commission (CTC). A more in depth discussion of the policies and standards regarding Route Adoptions can be found in Chapter 23 of the Project Development Procedures Manual.

The following map formats are used in the selection or designation of highway routes by the California CTC:

(a) freeway or a controlled access highway

(b) conventional highway

(c) route redesignation

(2) Format

(a) The form for the title and certificate for the four example formats are shown in Figures 3-2.2A through 3-2.2D at the end of this Section. Files of the examples in dgn format will be available on the intranet at http://onramp.dot.ca.gov/hq/design/prjdevp/index.htm. For freeway adoptions, the phrase “A FREEWAY” is added to the title block, and the wording “and declared a freeway “ is added to the CTC Executive Director’s certification. For controlled access highway adoptions, the phrase “A CONTROLLED ACCESS HIGHWAY” is added to the title block, and the phrase “and declared a controlled access highway” is added to the certification.

For conventional highway adoptions no special designation need be added to the title block or the certification.

Return to Section 3 Table of Contents, page 1-1

Adoption maps of traversable highways are show with the appropriate designation as discussed above.

A route redesignation map does not require either certification or signature blocks. The title will reflect the route to be redesignated. The date the CTC redesignates the route will be added to the map by the State and Local Project Development Program.

(b) The original map shall be 279 mm x 762 mm (11" x 30"). Where CADD preparation is not utilized, the map may be prepared on mylar film. Preparation of the base map will follow standard mapping practice, showing the usual geographical features, for example: rivers, lakes, railroads, streets, and roads. The major arterials in the corridor and most streets in proximity to the proposed route should be shown in urban areas. In rural areas all existing public roads or streets are to be delineated. Private roads are not to be shown in any case.

A roadway can be a "public highway" even though it is not an official "county road" or "city street". One of the factors to be considered in determining if a roadway is a public highway is whether it is being maintained at public expense; another is whether it is open for public use, regardless of who pays for maintenance. It is not necessary that the roadway be paved to be considered a public highway. Another test that can be applied is whether the roadway serves more than one of the ownership's not adjacent to the adopted route. District files should clearly document the facts upon which the determination is based.

(c) Existing freeways, and expressways with two or more lanes are shown by three parallel lines. A divided, multilane facility may be shown using four parallel lines. Freeway interchange geometrics are not drawn unless an existing facility is shown for clarity.

(d) The existing State highway is shown by two or more parallel lines and further identified by an attendant phrase, "Existing State Highway". Local streets may be drawn using a single or a double line, depending on the scale of the map.

(e) The route adoption limits in the title should refer to delineated features, for example: streets, roads, and rivers. Reference to either unincorporated towns or communities by name only or to incorporated city limit lines subject to change should be avoided. When either end of the route adoption limits is identical to a previous adoption, the description at such coincidental points should be identical when possible.

(f) When the adoption covers many kilometers and the map scale approaches 1:60000, consideration should be given to using two or more map sections.

(g) The map drafting style to be used for all route locations include:

- A heavy solid line showing the location of the proposed State highway and identified by the phrase "Location of State Highway".
- The designation of the termini for the location of the highway as "Beginning of Adoption" and "End of Adoption".
- The identification of the present State highway shown by parallel open lines, as "existing State highway".
- A solid dashed line showing the location of an adopted, unconstructed freeway and labeled with the date of the freeway adoption.
- An open dashed line showing the proposed location for another State highway concurrently being considered for adoption.

(3) Area of Interest Map

This is a 216 mm x 279 mm (8 1/2" x 11") reproducible of a District, county, or city map showing all State highways and major local roads when pertinent. In bold, large lettering the note "Project Location" shall be added with a large arrow pointing to the location of the project. The location of the requested route alignment should be in the central portion of the map.

For a sample of the "Area of Interest Map", see Figure 3-2.3A at the end of the section.

(4) Processing

The original map and Area of Interest Map should be transmitted in a rigid map tube to avoid damage during mail handling. A dgn file should also be submitted for the CTC Report.

Return to Section 3 Table of Contents

3-2.3 Strip Map

This is one of the most important maps developed for a project. It graphically shows the basic highway alignment and interchange locations. The following data is required:

(1) Plan

The map should show the freeway lanes, crossroads, separation structures, interchanges including the complete interchange pattern, and frontage roads. The local road pattern and prominent geographical features should be shown. Sufficient local street names at the interchanges and adjacent to the freeway should be shown to orient the drawings. A north arrow shall be provided, and shall generally be oriented to point to the right or up.

(2) Profiles

The freeway profile with its ground line shall be included. If the separate roadways have independent profiles which are substantially different, both shall be shown. Profiles of ramps, crossroads, and frontage roads are not required.

(3) Typical Section

A skeleton geometric typical section of the freeway only is to be included. The typical section shall show the number of lanes, median and shoulder widths.

(4) Traffic

All traffic movements for the design year with the AM and PM peaks and ADT shall be shown by means of traffic diagrams. Indicate the design year or year of traffic count.

Map scales should be kept in the 1: 2000 to 1: 7500 range. The date of preparation and subsequent revisions must be shown. Special original drawings are not required. The technique discussed in the introduction relating to uses of existing map sources should be considered and used whenever possible.

3-2.4 Freeway / Controlled Access Highway Agreement Exhibit

The purpose of the freeway agreement exhibit or a controlled access highway agreement exhibit is to document the agreement between the Department and a local agency on how and where local streets and roads will be connected to the controlled access facility. The exhibit shows the location of interchanges, separations, road closures, local roads, local streets, pedestrian crossing structures, and nonmotorized facilities (within the right of way). A more in depth discussion of the policies and standards regarding freeway agreements or controlled access highway agreements can be found in Chapter 24 of the Project Development Procedures Manual.

The freeway agreement and controlled access highway agreement exhibit are a reproducible map that is 279 mm wide by a length which varies depending on the limits of the agreement and the scale of the map. The scale of the map can vary from approximately 1:1000 to 1:10000. The length of the exhibit shall be sufficient to show at least one adjacent interchange or intersection on each side of the limits of the agreement or preferably should extend to the limits of the city or county, if practical. Thus the length of the exhibit should be some multiple of 216 mm and allow the title block to appear when the exhibit is folded.

The ability to clearly read information contained on the map should be the determining factor when selecting the appropriate scale, text size and number of sheets used for the exhibits. A graphic scale should be used on all exhibits as they may be in effect for a long period of time. By including a graphic scale this document can be reduced or enlarged without the loss of dimensional information. General text sizes are found in the CADD Users Manual of Instruction. Traffic data, cross sections and profiles are not shown on the agreement exhibits.

Return to Section 3 Table of Contents

The strip map or other available mapping, such as described in the introduction of this Section may be used as a base for the exhibit. This can be accomplished by making a duplicate from the original strip map on photosensitive polyester base film and eradicating unnecessary information. An alternate method consists of making a composite drawing using the "cut and paste technique" on a print of the strip map and obtaining a duplicate made on mylar film.

For examples of the symbol map used for the Freeway Agreement Exhibit and the geometric map used for the Freeway Agreement Exhibit, see Figures 3-2.4A, 3-2.4B and 3-2.4C at the end of this Section. Files of the examples in dgn format will be available on the intranet at http://onramp.dot.ca.gov/hq/design/prjdevp/index.htm.

3-2.5 New Public Road Connection Request

(1) Area of Interest Map

This is a 216 mm x 279 mm (8 1/2" x 11") reproducible of a District, county, or city map showing all State highways and major local roads when pertinent. In bold, large lettering the note "Location of Requested Connection" shall be added with a large arrow pointing to the location of the requested connection. The location of the requested connection should be in the central portion of the map.

For a sample of a New Public Road Connection Area of Interest Map, see Figure 3-2.5A at the end of this Section.

(2) Strip Map

A reduced copy that is 216 mm x 279 mm (8 1/2" x 11") of the proposed Freeway Agreement Exhibit or Controlled Access Highway Agreement is included in the CTC Report.

(3) Wall Display Detail Map (if requested by Design Program)

The data required is a skeleton outline of all roadways to scale showing the requested connection. The line weight and lettering (20 mm minimum height) shall be such as to be easily read at a distance of 10 m. No traffic figures, profiles, or typical sections are to be shown.

The vicinity and strip maps attached to the request to the CTC and the wall exhibit map used at the CTC presentation are prepared by the District. Reproducibles of the drawings required for CTC exhibits should all be of the same type. In other words, all reproducibles should be vellum or mylar transparencies, not a mixture of both.

The north arrow shall point either up or to the right. Sign route shall be shown on all State highways.

Wall maps can be made from enlargements of report (PSR or PR) attachments if consideration is given to the fact that wall maps have to be readable from 10 m.

Base maps selected for exhibits should have a minimum of extraneous notes and details.

A large block with the appropriate note, such as "Location of Requested Connection", shall appear on all maps with an arrow or lead line pointing to the location.

All maps and exhibits prepared for the CTC shall have the date the map was valid indicated thereon.

Other procedural information may be found in the Project Development Procedures Manual.

3-2.6 PUC Exhibits

(1) General

Certain exhibits are required by the Public Utilities Commission (PUC) whenever new railroad grade crossings are proposed, or an existing grade crossing is to be altered or abandoned. These exhibits are prepared in the district and forwarded to the Railroad Agreement Branch, MS# 9-2/9G, Division of Engineering Services for preparation of a notice or application to the PUC. These drawings shall clearly show the location and the work affecting the railroad.

Pertinent dimensions within railroad right of way shall be shown in dual units with metric units being primary (soft conversion) and english units in parenthesis. All other dimensioning on the plans shall be shown in metric only. Examples of pertinent dimensions would be right of way widths, horizontal and vertical clearances, rail elevations and track layout dimensioning.

Return to Section 3 Table of Contents, page 2-21

The exhibits for the PUC application consist of the following:

- Exhibit A - A cover letter giving general information and specific data related to the grade crossing. Exhibit A also includes a listing of other attached exhibits.
- Exhibit B- Two drawings, one of the drawings contains a location map and a vicinity map, the other drawing contains a strip map of the proposed project.
- Exhibit C - A drawing which shows the plan, some topography, profiles and typical sections of the proposed improvements. If more than one crossing is involved, one Exhibit B will suffice, but a separate Exhibit C must be prepared for each crossing.
- Exhibit D - A narrative of the legal description of the easements required for the subject crossing.

For an existing crossing to be abandoned, the only drawing exhibit required is Exhibit B.

Exhibits are not required for minor alterations to existing crossings.

For all new crossings which are being separated, all documents to the Railroad from the District and Structures shall be submitted by Railroad Agreements Branch. Each railroad has specific requirements and Railroad Agreements Branch makes sure that these requirements are met before the submittal. Initially the submittal package shall include the Structure General Plan, Strip map, Location and Vicinity Maps.

Once the Engineering plans have been approved by the Railroad, the sketch of the required easement and a legal description is submitted to the Railroad by the Railroad Agreements Branch. It should be noted that all documents to the Railroad should be submitted through the Division of Engineering Services, Railroad Agreements Branch.

Reproducibles of the Exhibit B and C drawings should be vellum or mylar transparencies. The sheet size is to be 216 mm x 279 mm or 279 mm width by any convenient length so that it can be readily folded and attached to the application. A 559 mm x 914 mm sheet is acceptable when conditions do not conveniently permit preparation of the 279 mm width.

(2) Exhibit B

The first drawing of Exhibit B shall contain the following:

(a) Location Map - The location map is a small scale State map showing the county in which the crossing is located. The county lines are to be outlined for the county in which the crossing is located. A location arrow shall be shown. The location map is shown on the same sheet as the vicinity map.

(b) Vicinity Map - This map is a small scale map showing the crossing in relation to nearby towns, city, other political subdivisions, and major cultural features. Usually a letter size map of the county showing towns, major land lines, such as township or rancho lines, etc. and major highways will suffice. The crossing location should be shown by means of a large bold arrow. The vicinity map is shown on the same sheet as the location map.

The second drawing of Exhibit B shall contain the following:

Strip Map - This map is basically a portion of the project map or title sheet. The scale should be about 1: 12 000 or 1: 24 000 and the map should cover an area within a radius of 1 to 2 km from the crossing. The strip map shows the relationship of the crossing to existing roads, railroads, and crossings. The PUC and the US. Department of Transportation crossing numbers for the subject crossing(s) shall be shown. The PUC number of the nearest crossing on each side of the new grade crossing shall be shown. (Not required if this is an existing crossing to be altered or abandoned.)

For new crossings, the strip map shall show the present traveled way of the State highway now being used by traffic which will later use the new crossing.

For an existing crossing to be abandoned, the strip map should clearly show the route that traffic now using the crossing will be required to travel after abandonment. The PUC crossing number should also be shown.

Return to Section 3 Table of Contents, page 2-21

(3) Exhibit C

(a) New Crossings (at grade crossing or separated grade crossing) - This exhibit shall contain the following:

- Plan - Generally at a scale of 1: 200 to 1: 500. For separated grade crossings, a copy of the Structure General Plan would be appropriate for use as the plan portion of the exhibit. Plan coverage for at grade crossings should extend about 120 m each side of the crossing on the railroad and 60 m on the highway. For at grade crossings, the proposed crossing protection devices are to be shown.
- Profiles - A separate profile for the railroad and for the highway. The railroad profile should show the railroad stationing, assumed if necessary, datum elevation, existing top of rail grades and rates, proposed rail grades, proposed PI's and VC's and the centerline of the highway crossing with station and elevation. The highway profile should show stationing, datum elevation, ground line, grade line with rates, PI's, and VC's, each rail by symbol with its elevation, and the station of each rail or track centerline.
- Typical Section - The geometric section of the highway at the crossing. Structural elements need not be shown. The typical section may be normal to the highway or the railroad. The statement that "Construction will be PUC Standard No. 3, of PUC General Order 72A, or equal" shall be added.
- Proposed Easements - The proposed easement should be superimposed on the Structure General Plan portion of the exhibit for a separated grade crossing. For at grade crossings, the proposed easement should be shown on the plan view of the exhibit.

(b) Existing Crossing to be Altered - The exhibit shall contain:

- Plan - Same plan for new crossing. In addition, the location of the existing and the proposed protection shall be shown. Also, where additional lanes are to be constructed at the crossing site, it is necessary to clearly indicate whether the additional lanes are to be constructed throughout the highway project.
- Profile - Same as profile for new crossing, as applicable.
- Typical Section. Same as typical section for new crossing.
- PUC Crossing Number - Should be shown either in the title or on the plan.
- Existing and Proposed Easements - Existing and proposed easements should be superimposed on the Structure General Plan portion of the exhibit for a separated grade crossing. For at grade crossings, the existing and proposed easement should be shown on the plan view of the exhibit.

(c) Existing Crossing to be Abandoned - An exhibit C is not required.

3-3 BRIDGE SITE MAPS

This Section 3-3 is under revision and will be updated at a later date.

Return to Section 3 Table of Contents

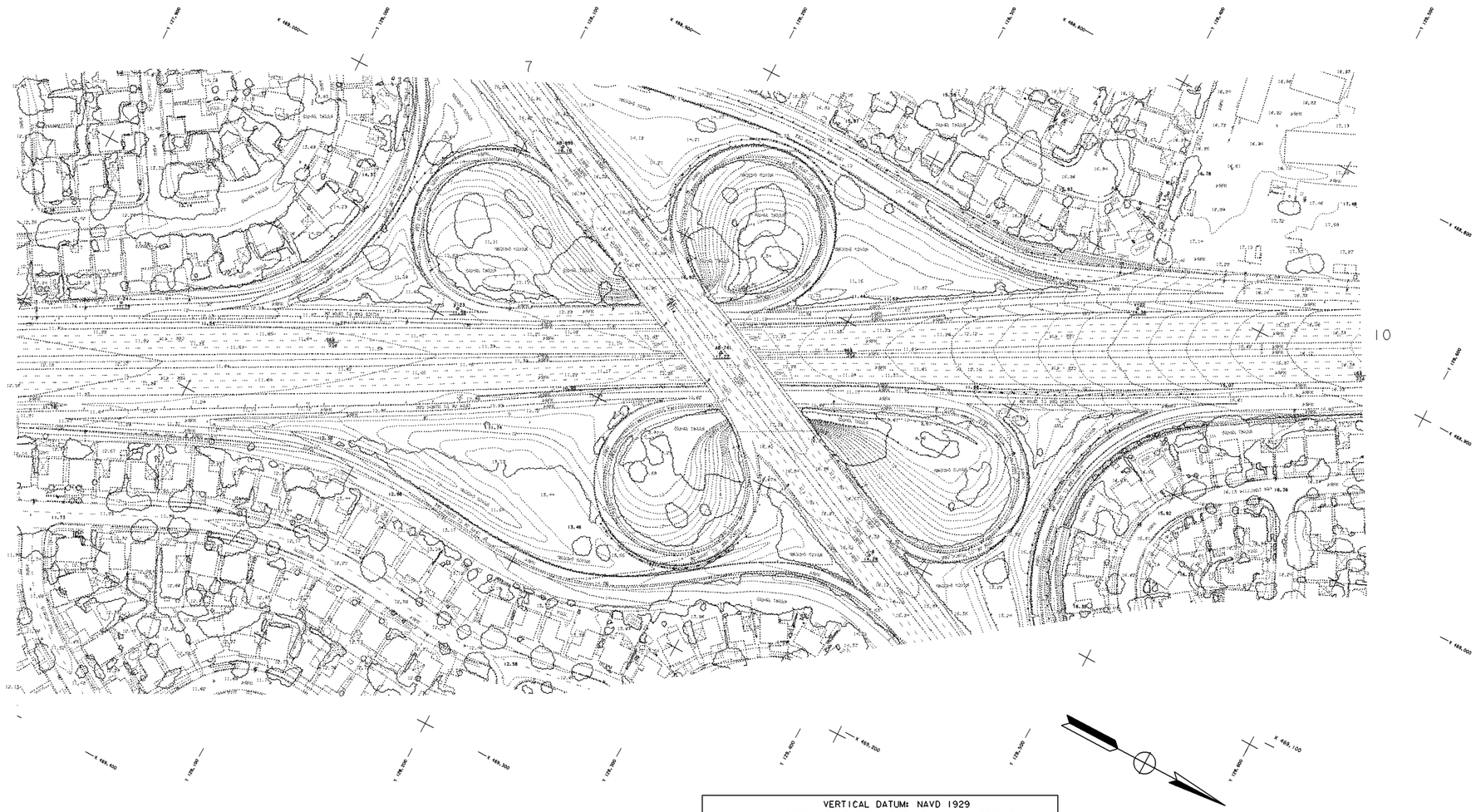

VERTICAL DATUM: NAVD 1929
COORDINATE SYSTEM: CCS 27 ZONE 3
UNITS = METERS SCALE = 1:500 CONTOUR INTERVAL = 0.5 m
CADD FILENAME: 495043W05.3DM
PLANE Z3W GO = X=301944.3335 Y=-105745.4551 Z=-214748.3648

STATE OF CALIFORNIA
DEPARTMENT OF TRANSPORTATION
HQ ASC 9501-43W2 A-ALA-92/880P.M.R5.5/7.2,15.4/18.8 SHEET 5 OF 9
PHOTO DATE 8-3-95 PHOTO ASC 9501-18 MAP COMPLETION DATE: 1-31-96
COMPILED BY: DIGITAL MAPPING, INC.
DIGITIZED BY: DIGITAL MAPPING, INC.

Return to Section 3 Table of Contents, page 3-2

PHOTOGRAMMETRIC MAP

Figure 3-1.3A

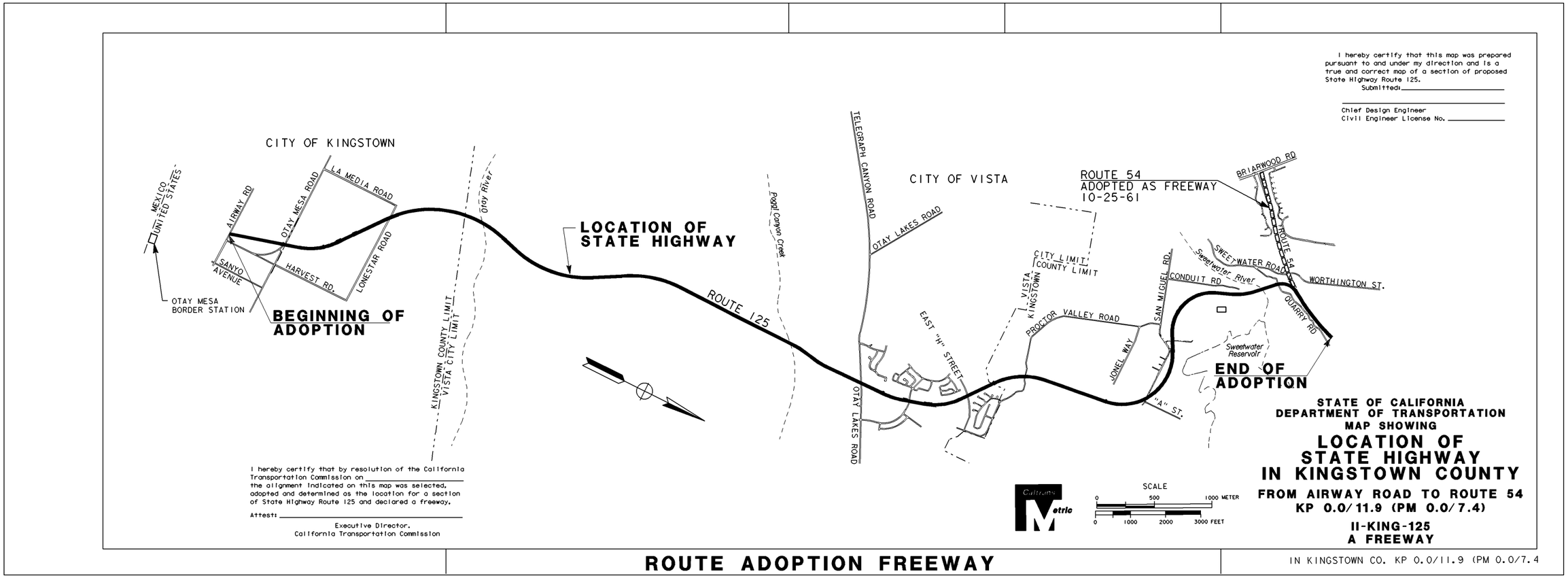

ROUTE ADOPTION FREEWAY

IN KINGSTOWN CO. KP 0.0/11.9 (PM 0.0/7.4

Return to Section 3 Table of Contents, page 3-2

Figure 3-2.2A

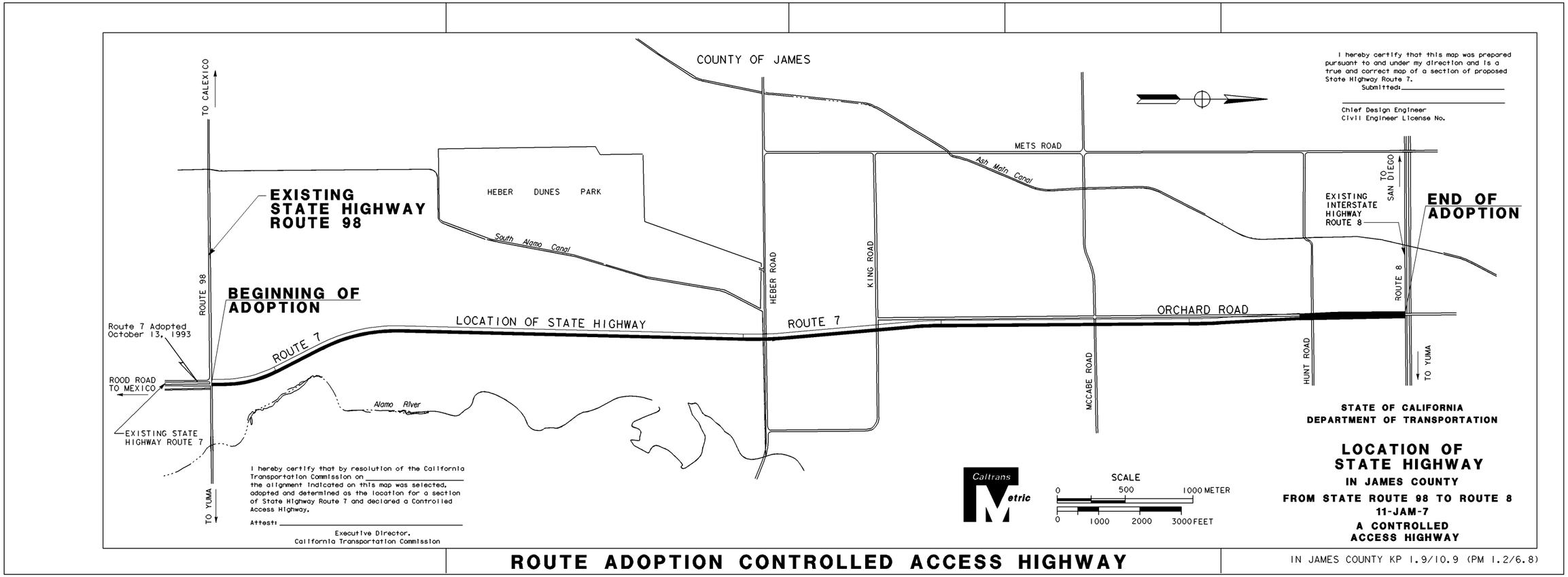

Return to Section 3 Table of Contents, page 3-2

Figure 3-2.2B

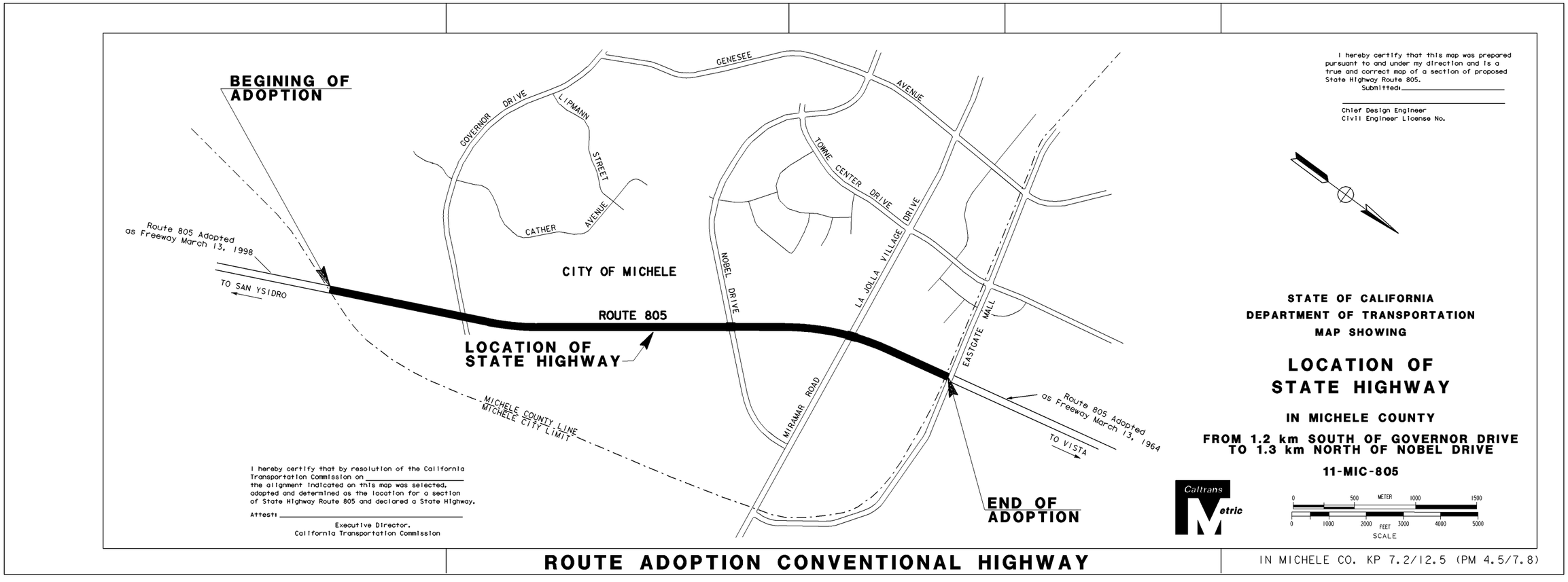

Return to Section 3 Table of Contents, page 3-2

Figure 3-2.2C

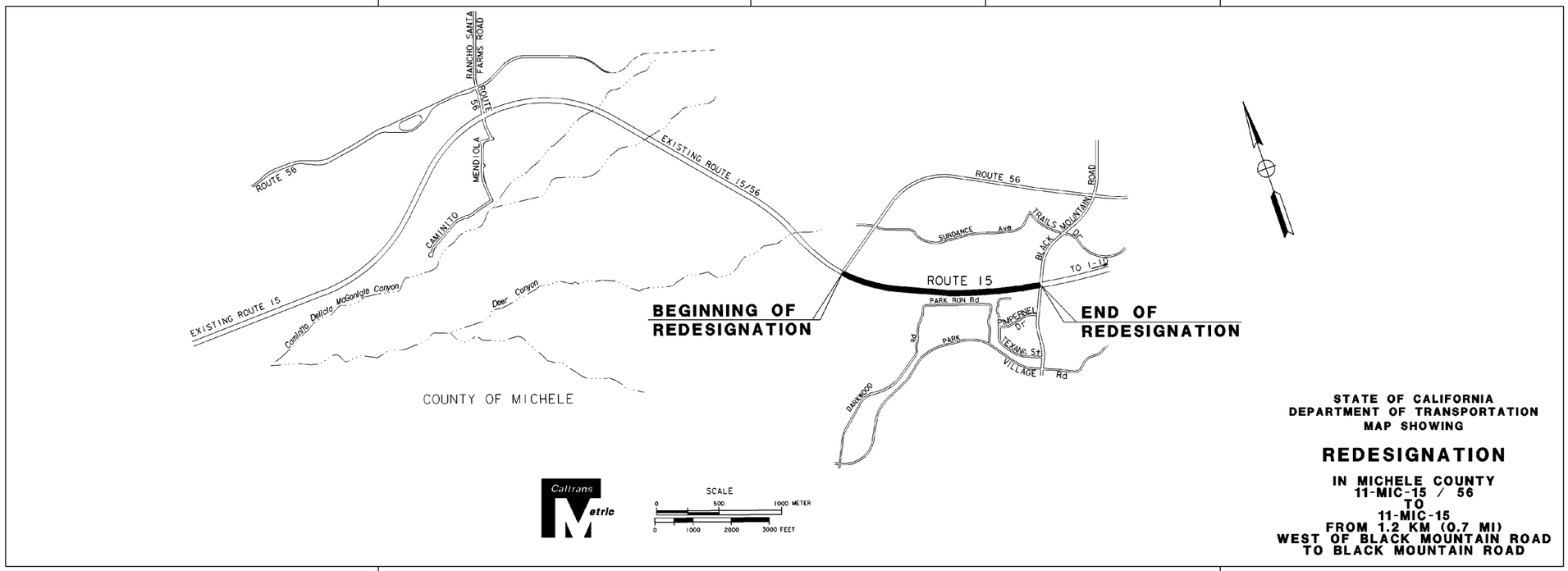

Explanation of this Example Redesignation:

Route 56 currently joins Route 15 at Caminito-Mendiola Road. It is designated as Route 15/56 from Caminito-Mendiola Road to Black Mountain Road. At this point existing Route 56 branches from Route 15 in a northerly direction along Black Mountain Road. A new alignment is proposed for Route 56 where it will branch to the north approximately 1.2 kilometers west of the existing connection of Black Mountain Road and Route 15/56. The exhibit shows the redesignation of this section of Route 15/56 to Route 15 from 1.2 kilometers west of Black Mountain Road to the Black Mountain Road/Route 15 connection.

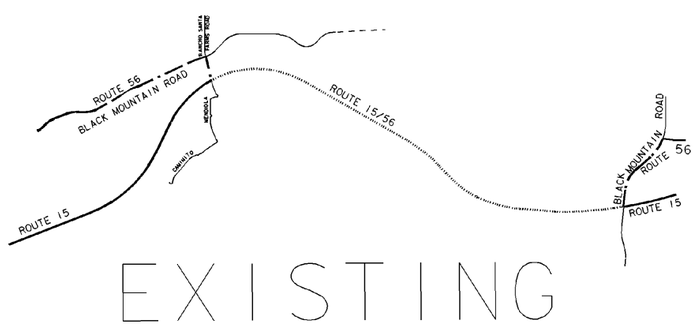

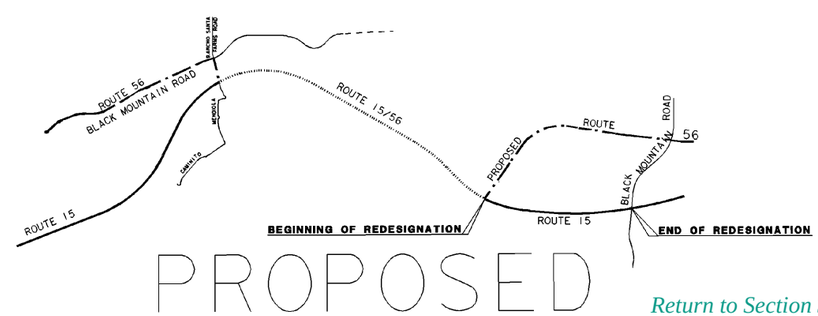

Return to Section 3 Table of Contents, page 3-2

Figure 3-2.2D

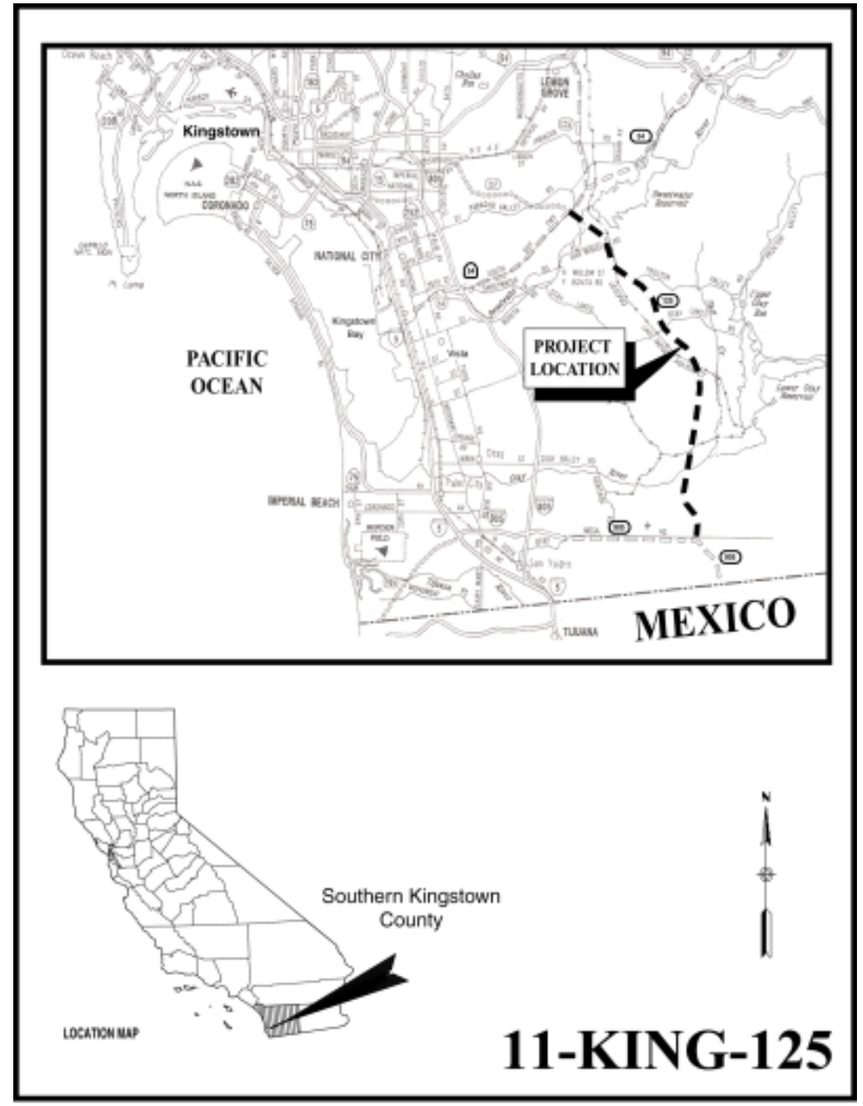

ROUTE ADOPTION
AREA OF INTEREST MAP

Figure 3-2.3A

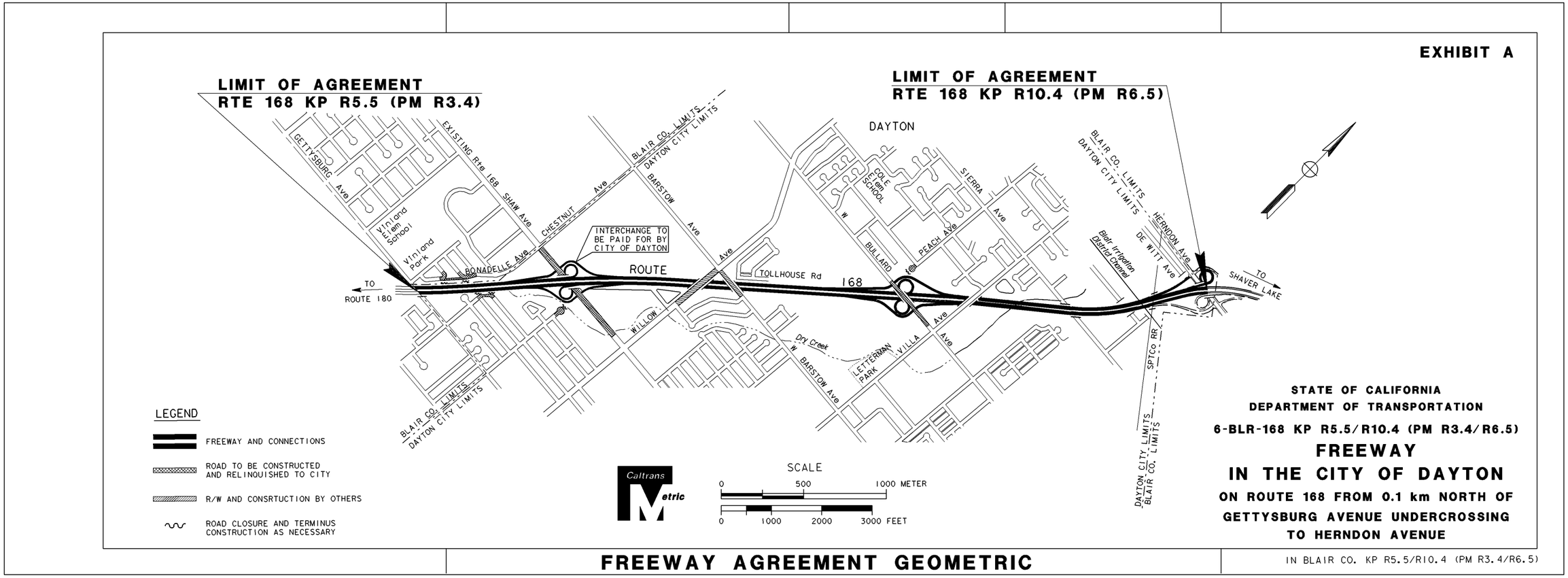

Return to Section 3 Table of Contents, page 3-5

Figure 3-2.4A

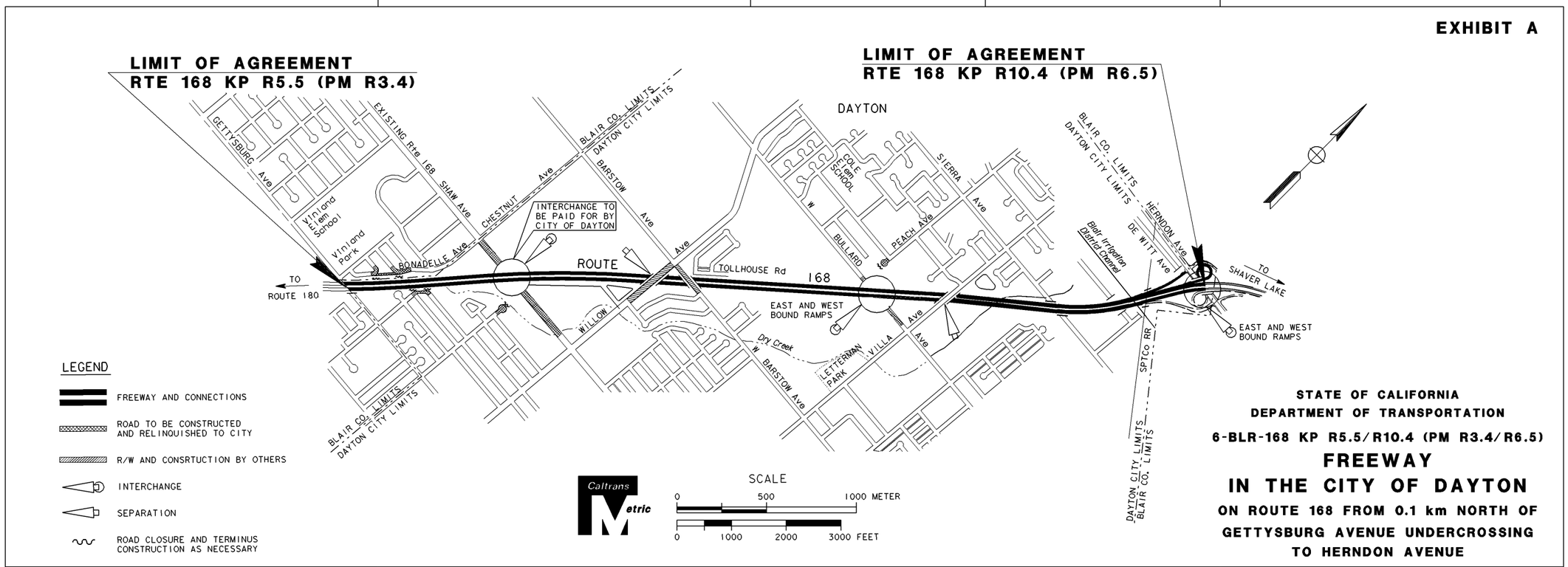

FREEWAY AGREEMENT SYMBOL

IN BLAIR CO. KP R5.5/R10.4 (PM R3.4/R6.5)

Return to Section 3 Table of Contents, page 3-5

Figure 3-2.4B

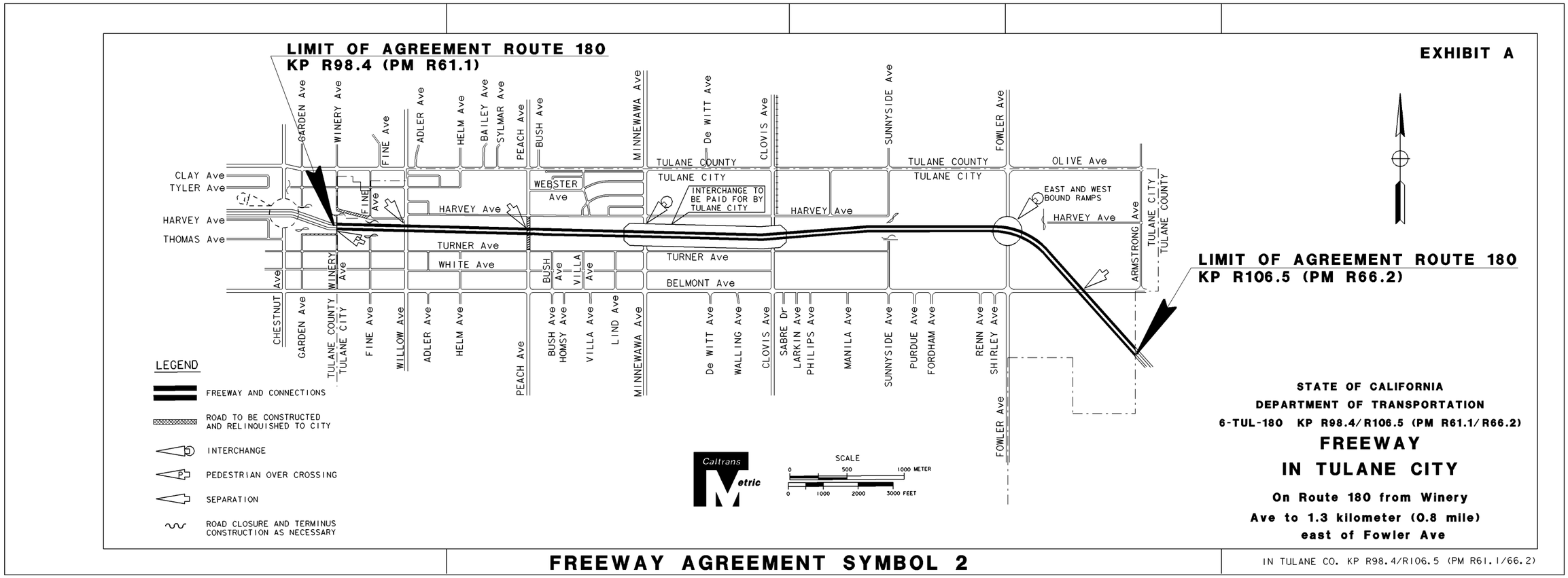

Return to Section 3 Table of Contents, page 3-5

Figure 3-2.4C

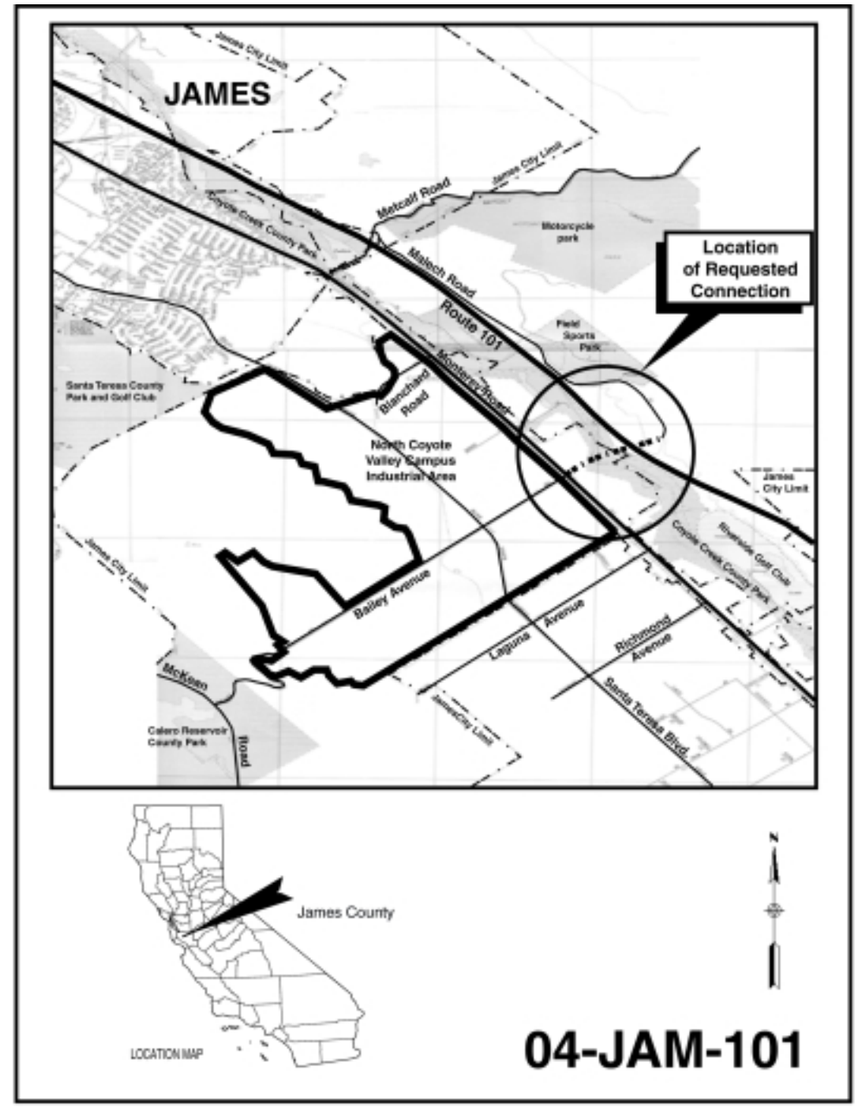

NEW PUBLIC ROAD CONNECTION
AREA OF INTEREST MAP

Figure 3-2.5A

Right of Way Engineering Mapping

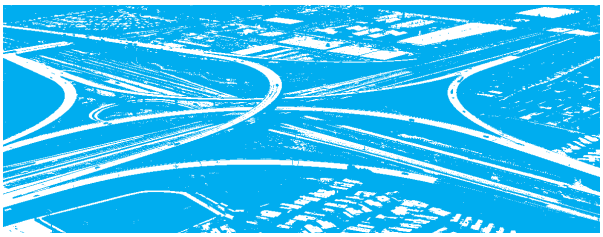

~~This Section 4 is under revision and will be updated at a later date.~~

The update to Section 4 can be found at the following website location under Technical Publications.

http://www.dot.ca.gov/hq/esc/geometronics/index.htm

Copy and paste the above referenced address to your browser.

Return to Main Table of Contents

TABLE OF CONTENTS

SECTION **PAGE NO.**

5-1. INTRODUCTION 5-1

5-2. CHAIR AND WORKSTATION GUIDELINES 5-1
- 5-2.1 Adjusting Your Chair 5-1
- 5-2.2 Adjusting Your Workstation 5-2
- 5-2.3 Proper Body Posture 5-2
- 5-2.4 Work Materials 5-2

5-3. LIGHTING 5-2

5-4. VISION CARE 5-3

5-5. WORK HABITS 5-3

5-6. CUMULATIVE TRAUMA DISORDERS 5-4

5-7. CARPAL TUNNEL SYNDROME SYMPTOMS 5-4

5-8. WHEN IT HURTS 5-4
- 5-8.1 Reporting Injuries / Illnesses 5-5

5-9. GENERAL BENEFITS OF EXERCISE AND GOOD NUTRITION 5-5
- 5-9.1 Eye Exercises 5-5
- 5-9.2 Stretching Exercises 5-6

Return to Main Table of Contents

Ergonomics

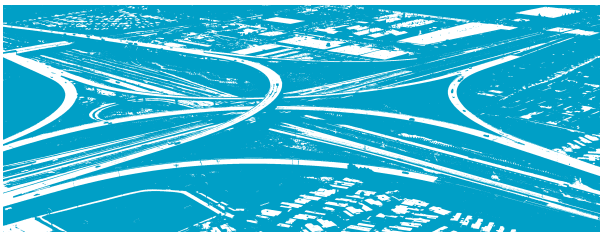

5-1 INTRODUCTION

Ergonomics? What is it?

Ergonomics is the study of the relationship between humans and machines. It is utilized as an applied science of designing and arranging things people use so that people and things interact most efficiently and safely. This Section will assist you in setting up your workstation and work habits ergonomically correct to prevent pain and injury, in particular injuries associated with the computer. These injuries are called cumulative trauma disorder injuries (CTDs) or repetitive motion injuries (RMIs).

There are many contributing factors to getting CTDs. Improper hand position and lack of exercise are two of the more common ones. There are several tips in this Section to correct the hand positions and various other offenders that can cause you pain. Your comfort and preventing CTDs is the focus of this Section. Work with your supervisors, coworkers, and Health and Safety Coordinators to get you and your workstation in good ergonomic shape.

5-2 CHAIR AND WORKSTATION GUIDELINES

There are health benefits to keeping your chair and workstation adjusted to the type of work you are doing. All of the adjustments help place the body in a neutral and comfortable position while working. This simply adds up to good posture and work habits that keep you from developing painful cumulative trauma disorders.

The types of chairs and workstations adjustments vary considerably. Become familiar with how your chair and workstation adjust. You may need assistance. The following are recommendations.

5-2.1 Adjusting Your Chair

(1) Adjust your chair to a comfortable position with your feet on the floor or on a foot rest.

(2) Adjust your backrest height to a comfortable position for your spine by adjusting the lumbar (lower back) support.

(3) Adjust your backrest to tilt in or out to support your body in an approximately upright position (readjust for different tasks such as keying, reading, or writing.)

(4) Set your seat pan angle slightly tilted down to avoid pressure on the backs of your knees or thighs.

(5) Adjust the armrests to support your arms in a relaxed position.

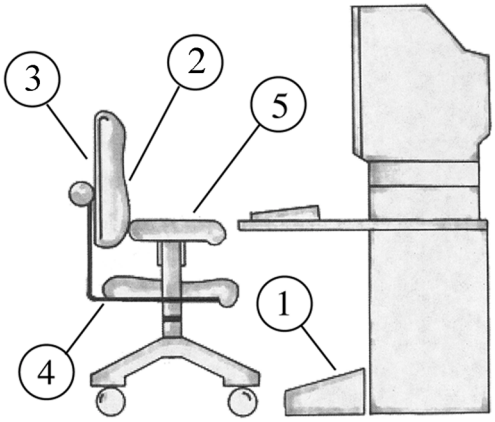

Return to Section 5 Table of Contents

5-2.2 Adjusting Your Workstation

1. Position the monitor at an appropriate reading distance for eye comfort. This is usually with your eyes at or just below the top of the screen. Bifocals - adjust the screen to read through the upper or lower part of your glasses keeping a comfortable position.

2. Place documents at about the same distance and height as your monitor.

3. Adjust your work surface to elbow level for keying. (Other work surfaces adjusted to read or write without slumping forward.

4. Adjust your workstation height and depth to make adequate room for your legs.

5. Place your mouse at elbow height keeping your wrist relatively straight. It should be close enough to use without reaching or stretching.

6. Position your keyboard to a height and angle where you are comfortable and your wrists are in a neutral (approximately straight) position.

7. Move your hands and arms freely while keying. Rest on a wrist only between keying.

5-2.3 Proper Body Posture

1. Keep your head balanced over your shoulders and hips.

2. Relax your fingers in curved position while keying. Padded wrist rests should only be used to rest your hands between keying.

3. Float your hand and arm freely over the keys to keep a neutral hand and wrist position.

4. Your hand and arm should move freely over the keyboard with your wrists in a relatively straight position.

5. Support your feet comfortably on the floor or on a foot rest in front of the knees.

6. Position your knees at the same level or slightly lower than your hips.

7. Place your elbows comfortably at your sides with your forearms horizontal.

8. Support your spine in a slightly arched position with the back of the chair.

5-2.4 Work Materials

A well organized and properly arranged workstation can help prevent muscle strain while improving your efficiency.

1. If you frequently use a telephone while at your workstation, ask about a headset. Cradling a receiver on the shoulder contributes to muscle strain and nerve damage.

2. Source documents should be at the same height, angle, and distance from eyes as the computer screen to avoid repeated head turning and frequent refocusing. A document holder can be attached to the side of the monitor to keep documents next to the screen and free desk space.

3. Keep frequently used materials and equipment in easy reach, within 14 to 18 inches.

4. Stand up to reach items above shoulder reach or behind you.

5. Maintain adequate leg clearance and good posture.

5-3 LIGHTING

Simple lighting adjustments can help you minimize glare and reduce eyestrain and headaches. Glare can come from a light source, such as a lighting fixture or the sun, or from a bright surface, such as a mirror, light-colored work surfaces, or light-colored clothing (e.g., white clothes). It is any uncomfortably bright light within a person's normal field of vision.

1. Lower the total (ambient) light levels whenever possible to reduce glare on your computer screen, i.e. remove or turn off some overhead lighting.

2. Avoid placing your monitor directly under cabinet task lights.

3. Position your screen at a right angle to the window producing glare. Also avoid lighting coming over your shoulder directly above or behind you.

4. Close your shades, curtains, or blinds as outside light levels change during the day.

5. Tilt your computer screen slightly down so that light does not reflect back into your eyes.

Return to Section 5 Table of Contents

6. Position your equipment to have ceiling lights off to the side.

7. Position task lights directly on your documents.

8. Adjust your monitor display contrast and brightness to improve viewing comfort.

9. Clean your screen periodically to maximize clarity. Characters on your screen should be clear and free from noticeable flicker.

10. Use a hood if necessary to shelter the screen from undesirable lighting.

11. In some situations, nothing else can be done except to use a glare screen. Polarized glass is the best and most costly, polarized film is the next best, and mesh screens are the least desirable because they reduce image quality.

5-4 VISION CARE

Sustained focus on computer monitor may cause visual and other discomfort. Be alert for the following symptoms: eye fatigue, dry itchy eyes, blurred vision, and/or headaches.

Possible Causes:

1. Overhead lights and bright windows may produce glare.

2. Monitor screen is too close or too far from eyes.

3. Poor display quality, i.e., brightness and contrast need adjustment.

4. Focusing on the monitor for extended periods of time without a break.

Prevention Tips:

1. The top of your screen should be adjusted to eye level to slightly below eye level.

2. Place your screen at the appropriate reading distance for your eyes.

3. A document holder should be used to place the documents at approximately the same height as the monitor.

4. High contrast and low brightness is the best setting on your monitor for visual clarity.

5. Regularly clean your monitor screen.

6. Frequently change focus from your work to an object at least 20 feet away.

7. Have your eyes examined regularly by a licensed optometrist or ophthalmologist. It is recommended yearly.

8. You should do the exercises below frequently and slowly at your workstation.

Eye Exercises:

1. Blinking - Blink frequently to moisten and relax your eyes.

2. Eye and Temple Massage - Using your fingertips, gently massage the bony area around each eye using short circular motions. Do the same for the area around your temples.

5-5 WORK HABITS

Even the best posture and the most ergonomically correct workstation won't prevent muscular stress and fatigue if you sit for several hours in one position. Breaks from computer work can help keep your eyes, mind and body refreshed and energized.

1. The National Institute for Occupational Safety and Health (NIOSH) recommends taking a short break every couple hours of uninterrupted work. (Check with your supervisor for your break schedule).

2. Experts also suggest brief, frequent "microbreaks." These breaks are defined as time spent doing something other than work on a computer. They don't have to involve leaving your workstation. Suggestions include moving around, stretching, doing non-computer tasks, and refocusing your eyes.

The timing of such microbreaks is more important than the length. To be the most effective, a break should be taken before the onset of fatigue, rather than recuperating from it.

See pages 5-5 thru 5-9 for examples of exercises for intermittent breaks from computer work.

5-6 CUMULATIVE TRAUMA DISORDERS

Cumulative Trauma Disorders (CTDs) are caused by repeated motions, excessive force, vibration, exposure to cold, awkward positions and over exertion. The arms and hands are especially vulnerable. The disorders can involve nerves, blood vessels or tendons, which connect muscles to bones. The following are examples of CTDs:

Carpal Tunnel syndrome: A nerve disorder resulting from pressure on the median nerve where it passes from the forearm through the carpal tunnel in the wrist and into the hand. When irritated, the sheaths that surround the tendons in the narrow tunnel can swell and press against the nerve. Symptoms include pain, numbness and tingling in the first three fingers and the base of the thumb. The symptoms often are worst at night. Surgery may be necessary but, only as the last option.

Tendinitis: Inflammation of a tendon from repeated tensing. With further exertion, some fibers that make up the tendon can fray or tear, and at the tendon may become thick and bumpy. Without rest and sufficient time for healing, the tendon may be permanently weakened.

Tenosynovitis: Swelling of the sheath surrounding a tendon, which contains a lubricant called synovial fluid. Repeated motions may stimulate the sheath to produce excess fluid, which accumulates and causes pain in the sheath.

Thoracic outlet syndrome: Compression of the nerves and blood vessels between the neck and shoulder. Symptoms include numbness in the fingers and tingling in the arm.

Ulnar neuritis: A nerve inflammation that results from pressure on the ulnar nerve over time, including leaning on the elbow on hard or sharp surfaces for long periods. Symptoms include tingling and numbness in the small finger and ring finger.

5-7 CARPAL TUNNEL SYNDROME SYMPTOMS

1. Swollen feeling of the fingers, yet no physical evidence of swelling.

2. Numbness in the thumb or hand.

3. Tingling in the thumb or hand.

4. Pain in the fingers or hand.

5. General arm and hand weakness.

6. Burning sensation in the hand and arm.

7. Loss of muscle strength at the base of the thumb.

8. Dry, shiny palms and clumsiness of the affected hand.

9. Changes in sensation and power to squeeze things.

If you are experiencing any of these symptoms, your workstation should be evaluated by you and a person trained in office ergonomics. Ask your supervisor and/or department's Health and Safety Coordinator for assistance.

5-8 WHEN IT HURTS

Quick fixes for you workstation. Sometimes we have muscle stress or pain in specific areas. The following are quick solutions.

Neck: *Is your computer monitor too low?* Raise it using a monitor stand, the CPU, telephone books or other stable objects so that your eyes are level with or slightly below the top of the screen. *Do you wear bifocals?* Lower your screen so that the screen is visible in the reading part of your glasses and you are not slouching. *Are you working with your neck bent forward?* Consider a slant board for reading and writing. *Do you use a telephone frequently?* Use a headset.

Shoulders: *Is your work surface too high?* Raise your chair height and use a foot rest if your feet don't touch the floor. Your keyboard should be a little lower than your elbows when your arms are relaxed at your side. *Do you reach out a lot?* Bring objects closer to your body (within 18 inches), or move forward or stand up to reach. You can move your chair under your keyboard or use a keyboard tray. If you use a mouse, bring it close to your body.

Return to Section 5 Table of Contents

Elbow: *Do you have a forceful grip when using your mouse or other tools?* Relax your hand over your mouse and gently click. Use a pen sleeve, gripper or foam from a soft plastic hair curler to extend the grip on your pen or pencil.

Wrist/Hand: Avoid forceful gripping. Keep wrists straight for typing or tool use, i.e., not bent forward, backward or sideways. Do your work lightly and gently, don't pound. Rest your hands between keying or writing.

Thumb: Use pen sleeves and grips. Use electric staplers and avoid pinch type staple removers (also see instructions for elbow problems.)

Upper Back: Avoid long reaches (see instructions for shoulder problems.) Avoid slouching and make sure you have good lumbar support. Recheck your upright posture every 20-30 minutes after standing and stretching. If your chair has armrests that are too low or too far away from your body, wrap foam or a cervical collar (available at drug stores) around them to widen and raise the armrest.

Lower Back: Sit with knees at or slightly below hip level with feet supported. (You may need a small pillow at your belt line or lower back.) Stand and stretch every 20-30 minutes. If you're standing while working, get a block of wood or a small stool and put one foot on the stool, then alternate with the other foot. Rocking side to side also decreases low back pain.

Eye Strain: Position the computer screen so that the least light falls directly on it. If fluorescent lights are causing the glare and you can't reposition the screen, have every other bulb removed or even whole banks that are direct offenders. A glare screen or a screen hood can be used. Temporary hoods can be made from cardboard to eliminate the glare. Use mini blinds or other adjustable window coverings to control the amount of daylight entering your office at various times of the day.

5-8.1 Reporting Injuries / Illnesses

Cumulative Trauma Disorder (CTD) symptoms or any other illness or injury you think is work related should be reported to your supervisor. Early reporting results in more successful treatment of these symptoms with nonsurgical interventions.

5-9 GENERAL BENEFITS OF EXERCISE AND GOOD NUTRITION

Exercise should be an integral part of every ergonomics program especially general exercise, such as walking, running, bicycling or swimming. Stretch and strengthen exercises are also critical to preventing ergonomic injuries. This doesn't minimize the need for ergonomically correct workstations. The combination of good ergonomics, exercise and good nutrition is a very successful combination in preventing cumulative trauma injuries.

Benefits:

- Increased circulation
- Improved general health
- Increased alertness and concentration
- Improved posture by increasing body awareness
- Improved potential to prevent and/or eliminate muscle and join pain
- Improved potential to prevent cumulative trauma disorders

5-9.1 Eye Exercises

Cup Them

1. Cup your hands and place them lightly over your closed eyes.

2. Hold for a minute, while breathing deeply in and out.

3. Slowly uncover your eyes.

Roll Them

1. Close your eyes and slowly roll your eyeballs clockwise all the way around. Repeat three times.

2. Now slowly roll them all the way around counterclockwise. Repeat three times.

Look Away

1. Every 1/2 hour, look away from the computer screen.

2. Focus on an object at least 20 feet away.

3. Look back at the screen, then look away and focus again.

4. Repeat three times.

Return to Section 5 Table of Contents, page 5-3

5-9.2 Stretching Exercises

Be sure you have enough room before stretching and always stretch gently using controlled movements. If you experience discomfort or pain, discontinue and consult a health care professional. If under care, check with your health care professional prior to doing these exercises.

Hand, Elbow and Shoulder

While sitting or standing:

1. Gently push elbows back with arms parallel to the floor.
2. Push palms forward while extending arms.
3. Spread fingers apart.
4. Repeat three times.

Shoulders

While sitting or standing:

1. Push elbows back.
2. Hold for five seconds.
3. Repeat three times.

Shoulders

While sitting or standing:

1. Relax shoulders.
2. Roll them forward five times.
3. Roll them backward five times.
4. Repeat as needed.

Be sure you have enough room before stretching.

Return to Section 5 Table of Contents, page 5-3

Shoulders

1. Stand and stretch arms out.
2. Do small gentle arm circles.
3. Repeat five times.
4. Advance to larger arm circles.

Triceps

While sitting or standing:

1. Bring one arm in front and bend elbow while placing hand over opposite shoulder.
2. Gently push elbow toward chest about twenty seconds.
3. Repeat with the other arm.
4. Repeat as needed.

Legs

1. With back supported by the chair, extend leg.
2. Flex and point foot.
3. Repeat with other leg.
4. Repeat as needed.

Legs

1. With back supported by the chair and one foot on the ground, use both hands to gently pull knee forward to chest.
2. Hold for five seconds.
3. Alternate legs.
4. Repeat three times.

Be sure you have enough room before stretching.

Return to Section 5 Table of Contents, page 5-3

Neck

1. Place right hand on the head.
2. Let neck gently stretch toward the shoulder.
3. Hold stretch for about twenty seconds.
4. Repeat three times

Neck

1. Turn head and look over your shoulder slowly and gently.
2. Hold for five seconds.
3. Repeat three times.

Lower Back

1. Push chair a full arm stretch from desk.
2. Lean forward and touch the floor.
3. Return to sitting position.
4. Repeat as needed.

Lower Back

1. Stand with hands supporting the low back.
2. Gently arch your back.
3. Hold for five seconds.
4. Repeat as needed.

Be sure you have enough room before stretching.

Return to Section 5 Table of Contents, page 5-3

Upper Back and Shoulders

1. Move one arm overhead and then the other in a climbing motion.

2. Repeat five times.

Upper Back and Shoulders

1. With right elbow up and bent, circle shoulder forward and then backward.

2. Repeat five times.

3. Repeat with left side.

Be sure you have enough room before stretching.

Return to Section 5 Table of Contents, page 5-3